BE - GE	Parts Replacements List **9500** **Be-Ge**	Doc. R1-9500 Date 130522 Rev. 0
	Valid from 850101 to	Rev.Date

Be-Ge Industri AB • Box 912 • S-572 29 Oskarshamn • Sweden • Phone +46(0)491761800 • Fax +46(0)49181900

BE - GE	Parts Replacements List **500467** **BASE 9500F**	Doc. R1-500467 Date 130523 Rev. 0
	Valid from 850101 to	Rev.Date

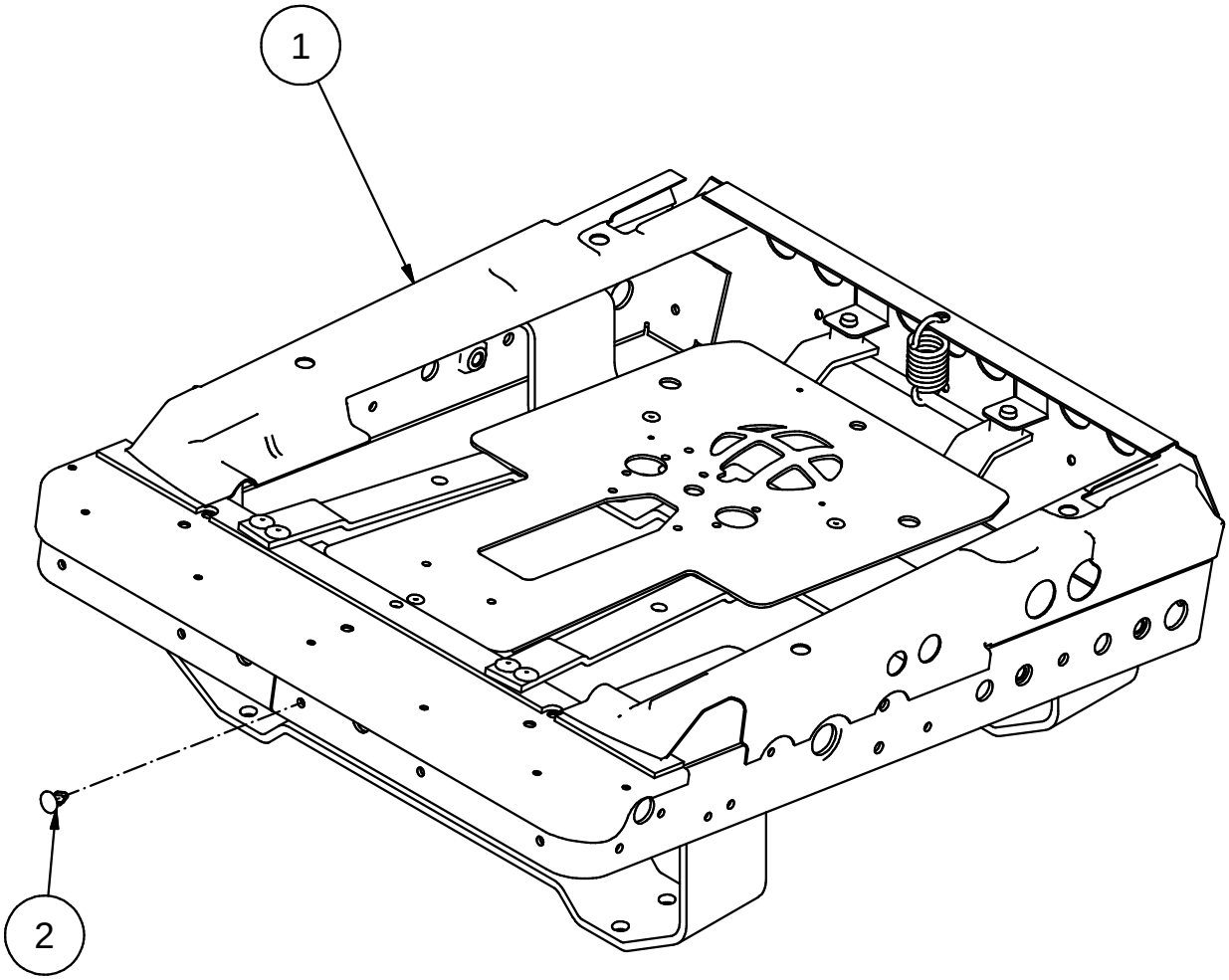

Fig.	Part. No.	Quantity	Description		
1	500467	1	BASE 9500		
2	660143	1	CLIP		

Be-Ge Industri AB • Box 912 • S-572 29 Oskarshamn • Sweden • Phone +46(0)491761800 • Fax +46(0)49181900

BE - GE	Parts Replacements List **500285** **BACKREST 640 LSA-RIGHT** **9000**	Doc. R1-500285 Date 100831 Rev. 0
	Valid from 840202 to	Rev.Date

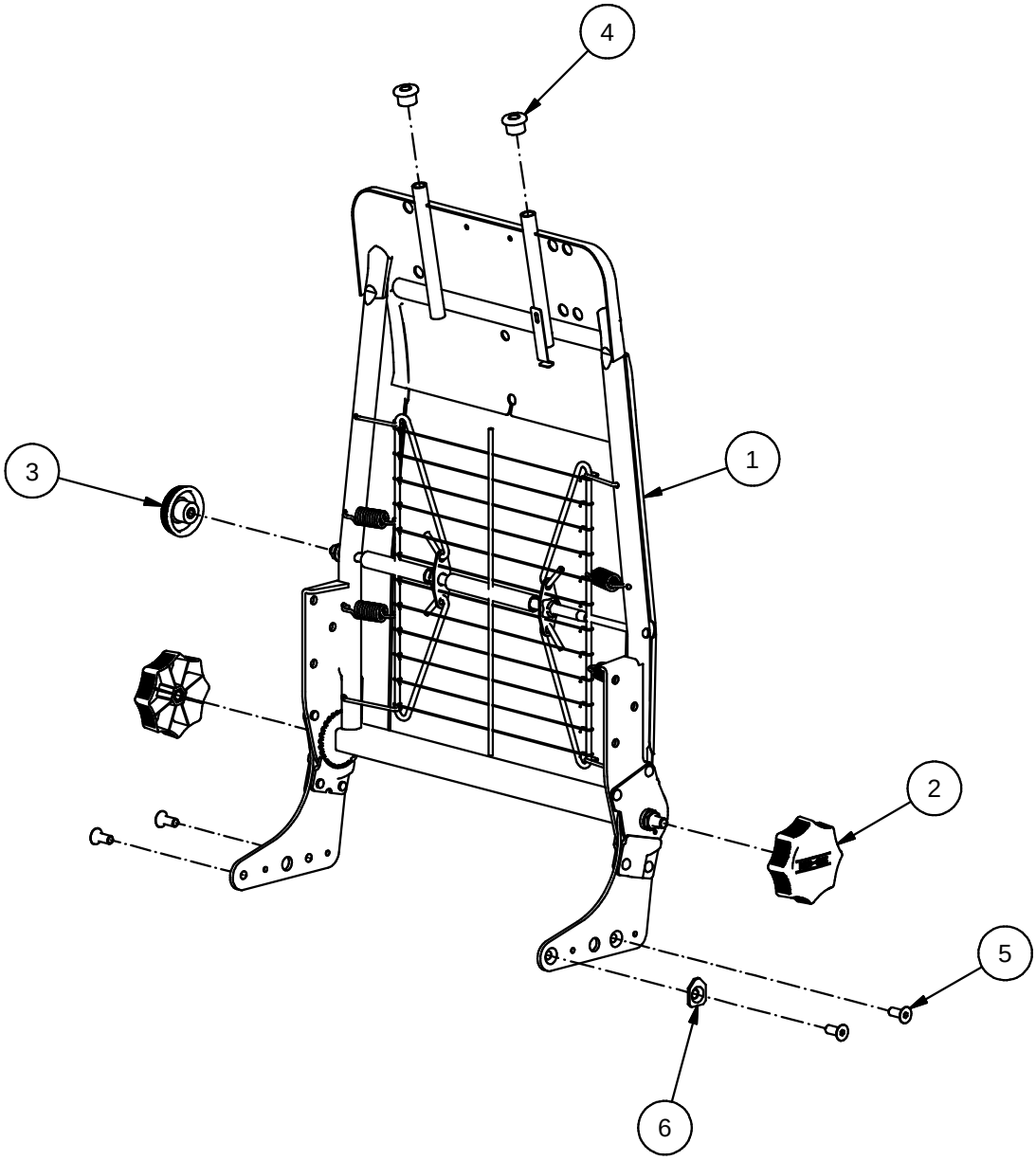

Fig.	Part. No.	Quantity	Description		
1	628026	1	ASSEMBLED BACKREST		
2	621408	2	HAND WHEEL M10		
3	500279	1	HANDWHEEL M8		
4	500385	2	HEADREST GROMMET		
5	310930	4	SCREW MF6S	M8x20	DIN7991 ZN-BL 10.9
6	620143	1	EXCENTER WASHER		

Be-Ge Industri AB • Box 912 • S-572 29 Oskarshamn • Sweden • Phone +46(0)491761800 • Fax +46(0)49181900

BE - GE	Parts Replacements List **621246** **BACKREST 640 4-WAY LS 9000**	Doc. R1-621246 Date 121016 Rev. 0
	Valid from 970605 to	Rev.Date

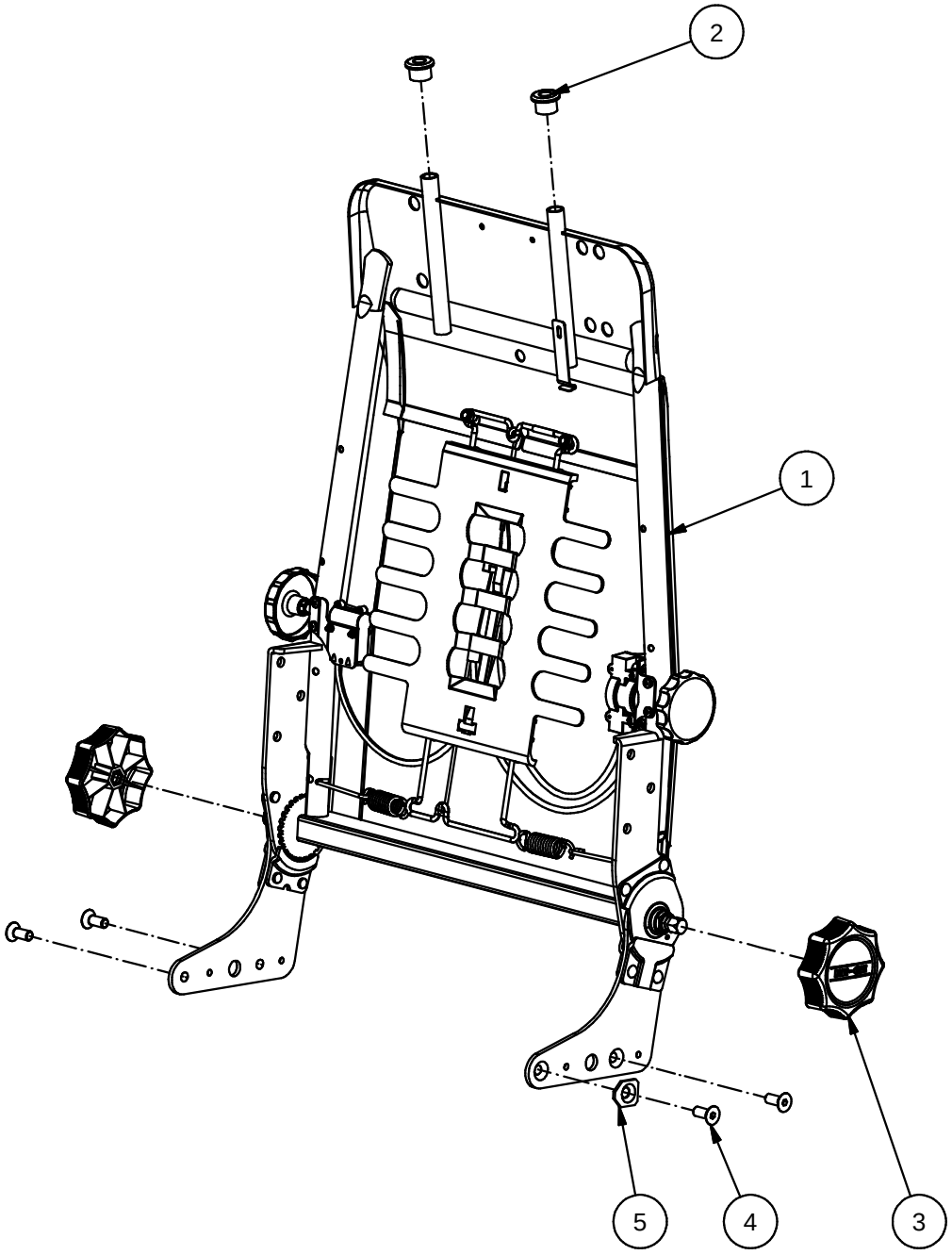

Fig.	Part. No.	Quantity	Description		
1	628028	1	ASSEMBLY BACKREST 640 9000		
2	500385	2	HEADREST GROMMET		
3	621408	2	HAND WHEEL M10		
4	310930	4	SCREW MF6S	M8x20	DIN7991 ZN-BL 10.9
5	620143	1	EXCENTER WASHER		

Be-Ge Industri AB • Box 912 • S-572 29 Oskarshamn • Sweden • Phone +46(0)491761800 • Fax +46(0)49181900

BE - GE Establ. 1934	Parts Replacements List **628940** **BACKREST 640QR (RIGHT LUMBAR SUPPORT)** **9000**	Doc. R1-628940 Date 080610 Rev.
	Valid from 051201 to	Rev.Date

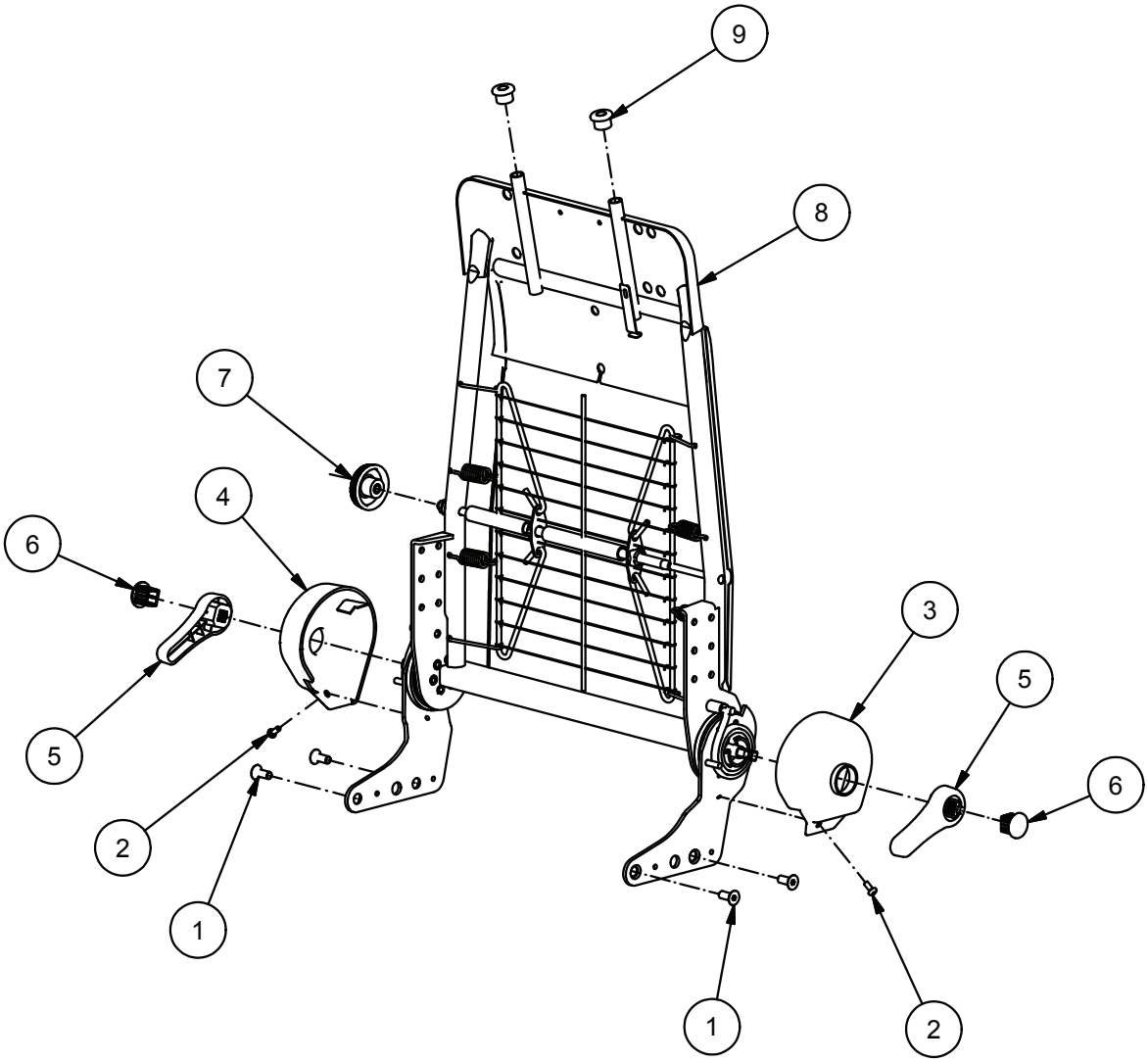

Fig.	Part. No.	Quantity	Description		
1	310930	4	SCREW MF6S	M8x20	DIN7991 ZN-BL 10.9
2	650126	2	SCREW MRT-TT	M5x12	ISO7045 ZN BLACK
3	628831	1	COVER LEFT		
4	628832	1	COVER RIGHT		
5	628833	2	GRIP		
6	628834	2	CAP GRIP		
7	500279	1	HANDWHEEL M8		
8	628939	1	BACK FRAME 640 QR		
9	500385	2	HEADREST GROMMET		

Be-Ge Industri AB • Box 912 • S-572 29 Oskarshamn • Sweden • Phone +46(0)491761800 • Fax +46(0)49181900

BE - GE	Parts Replacements List **629150** **BACKREST 640 QR 4-WAY LS 9000**	Doc. R1-629150 Date 121016 Rev. 0
	Valid from 060607 to	Rev.Date

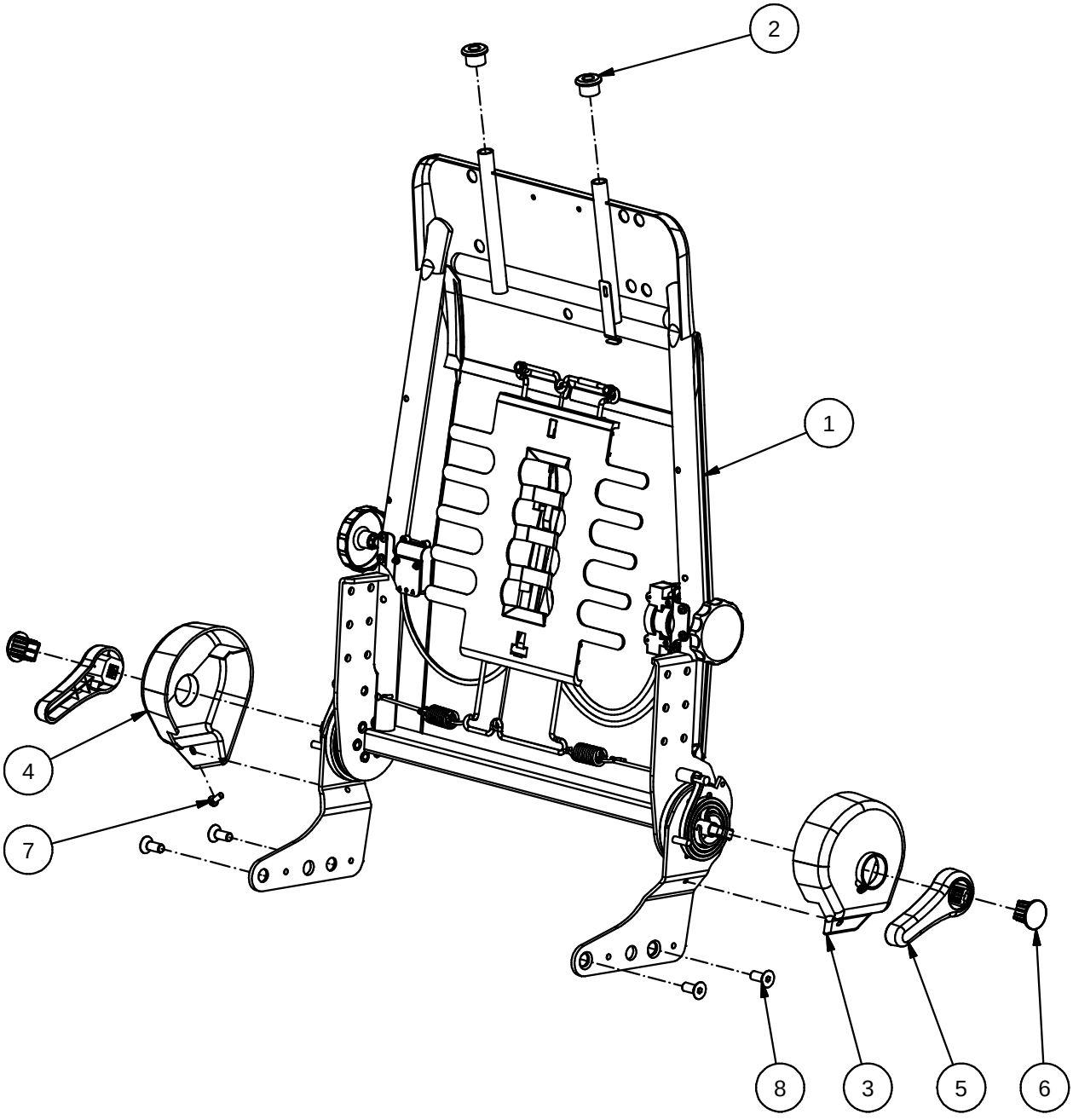

Fig.	Part. No.	Quantity	Description		
1	629009	1	ASSEMBLE BACKREST 640 9000		
2	500385	2	HEADREST GROMMET		
3	628831	1	COVER LEFT		
4	628832	1	COVER RIGHT		
5	628833	2	GRIP		
6	628834	2	CAP GRIP		
7	650126	2	SCREW MRT-TT	M5x12	ISO7045 ZN BLACK
8	310930	4	SCREW MF6S	M8x20	DIN7991 ZN-BL 10.9

Be-Ge Industri AB • Box 912 • S-572 29 Oskarshamn • Sweden • Phone +46(0)491761800 • Fax +46(0)49181900

BE - GE
Establ. 1934

Parts Replacements List

628571

TRIM KIT SEAT CUSHION NIGHTFALL

9000

Valid from 040501 to

Doc. R1-628571

Date 081124

Rev.

Rev.Date

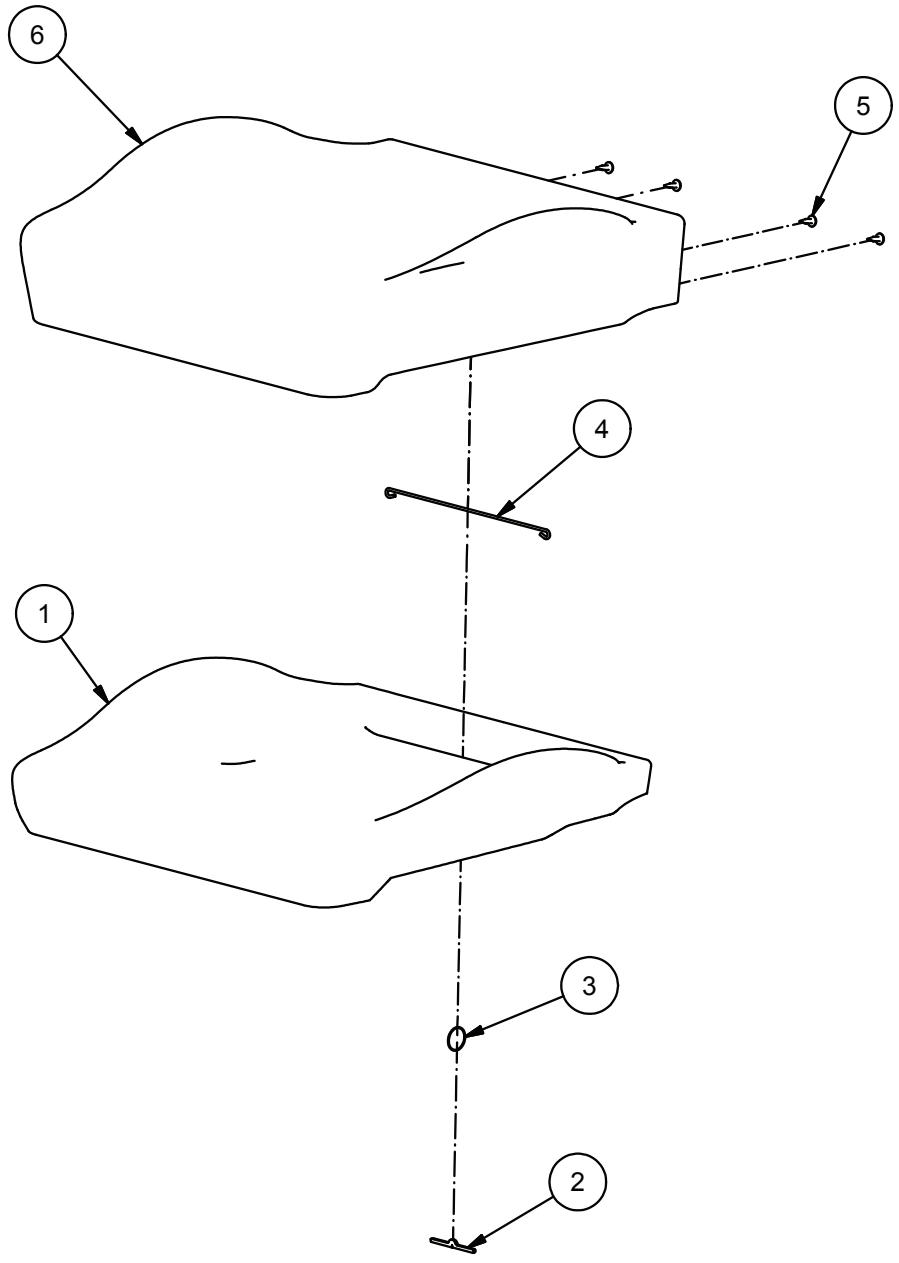

Fig.	Part. No.	Quantity	Description		
1	500190	1	FOAM CUSHION		
2	621404	1	BARETT PIN		
3	660057	1	LOOPS 30 MM		
4	620140	1	BRACKET L=230		
5	500214	4	PLASTIC RIVET		
6	641329	1	TRIM CUSHION		NIGHTFALL

Be-Ge Industri AB • Box 912 • S-572 29 Oskarshamn • Sweden • Phone +46(0)491761800 • Fax +46(0)49181900

BE-GE Establ. 1934	Parts Replacements List **628572** **TRIM KIT SEAT CUSHION CT NIGHTFALL 9000**	Doc. R1-628572 Date 110428 Rev. 0
	Valid from 040501 to	Rev.Date

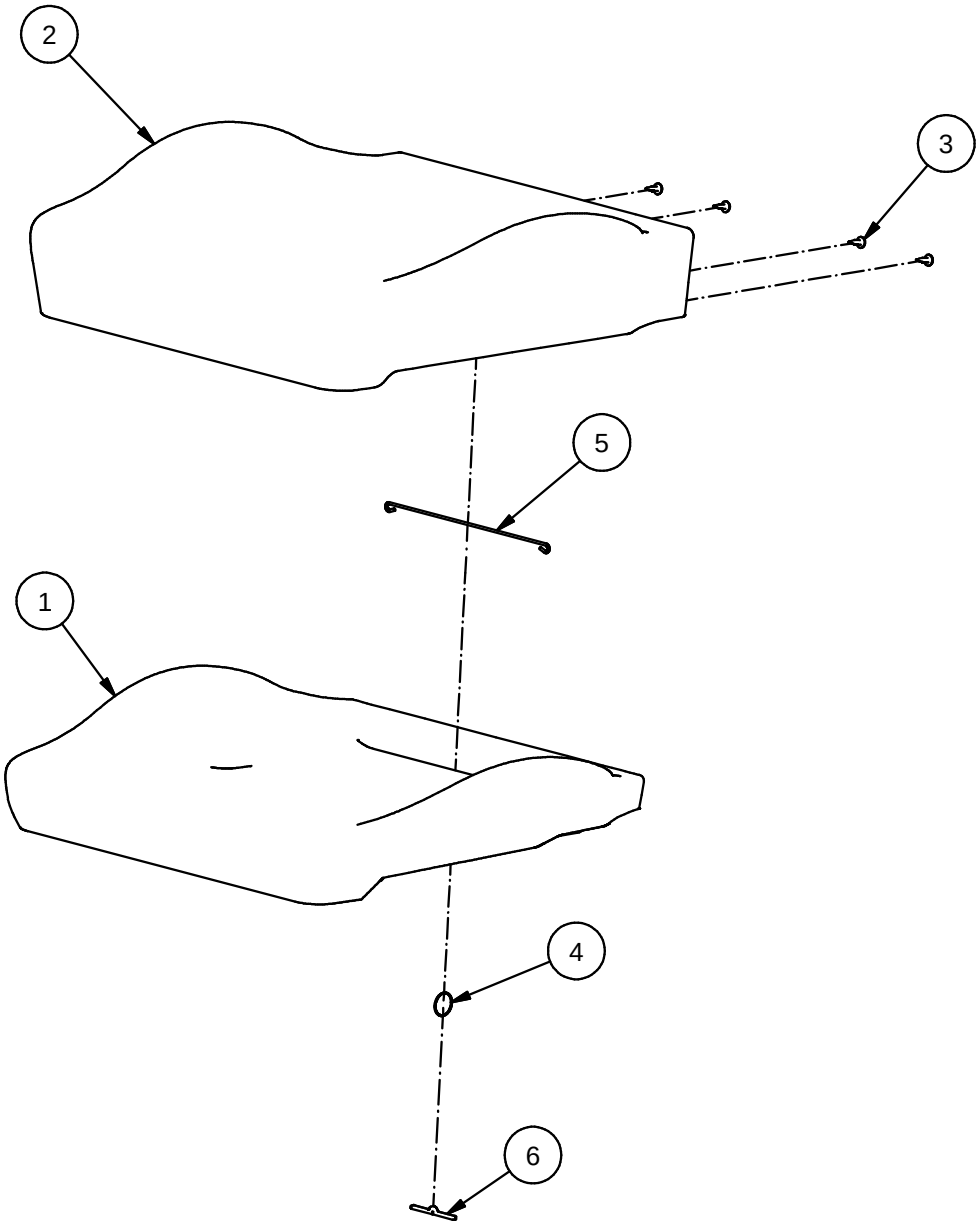

Fig.	Part. No.	Quantity	Description		
1	500189	1	FOAM CUSHION		
2	641329	1	TRIM CUSHION		NIGHTFALL
3	500214	4	PLASTIC RIVET		
4	660057	1	LOOPS 30 MM		
5	620140	1	BRACKET L=230		
6	621404	1	BARETT PIN		

Be-Ge Industri AB • Box 912 • S-572 29 Oskarshamn • Sweden • Phone +46(0)491761800 • Fax +46(0)49181900

BE - GE	Parts Replacements List **628574** **TRIM KIT SEAT EPN NIGHTFALL** **7130LC4**	Doc. R1-628574 Date 110302 Rev. 0
	Valid from 110302 to	Rev.Date

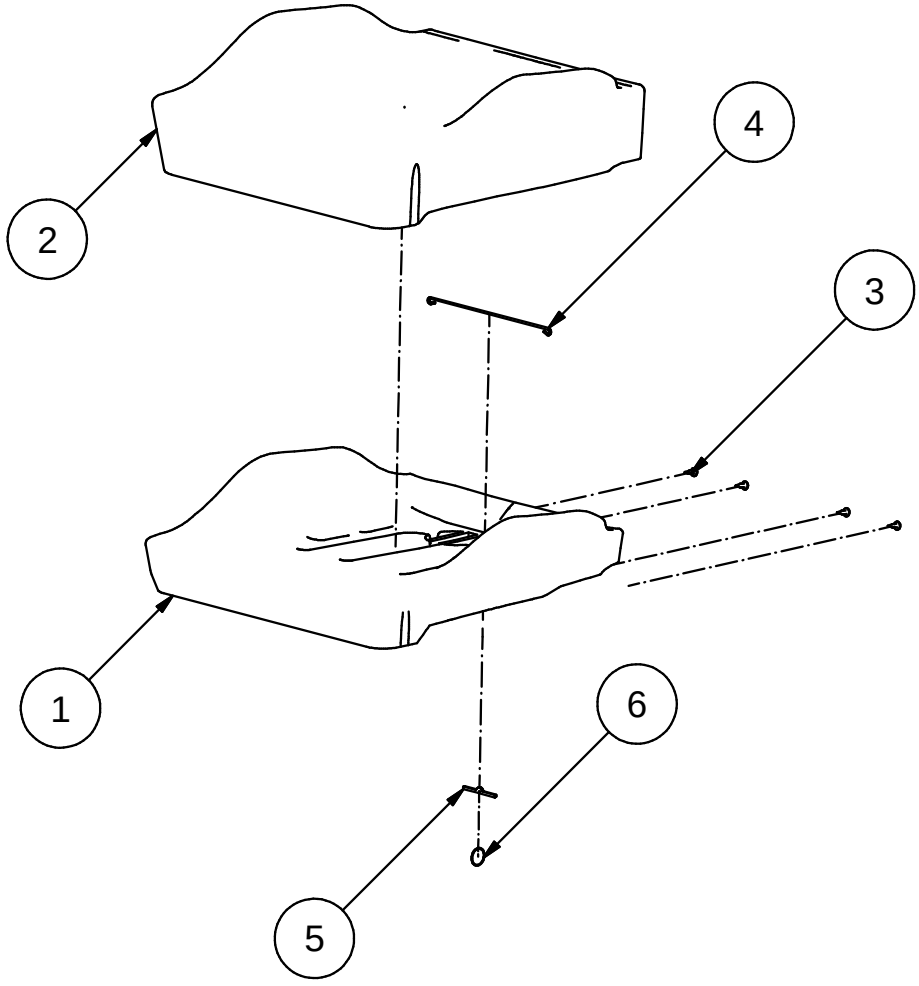

1	621388	1	FOAM CUSHION		
2	641330	1	TRIM SEAT		
3	500214	4	PLASTIC RIVET		
4	620140	1	BRACKET L=230		
5	621404	1	BARRET PIN		
6	660057	1	LOOPS 30MM		

BE - GE
Establ. 1934

Parts Replacements List

628597

TRIM KIT SEAT AIR 12V
NIGHTFALL

Valid from 040506 to

Doc.	R1-628597
Date	120601
Rev.	0
Rev.Date	

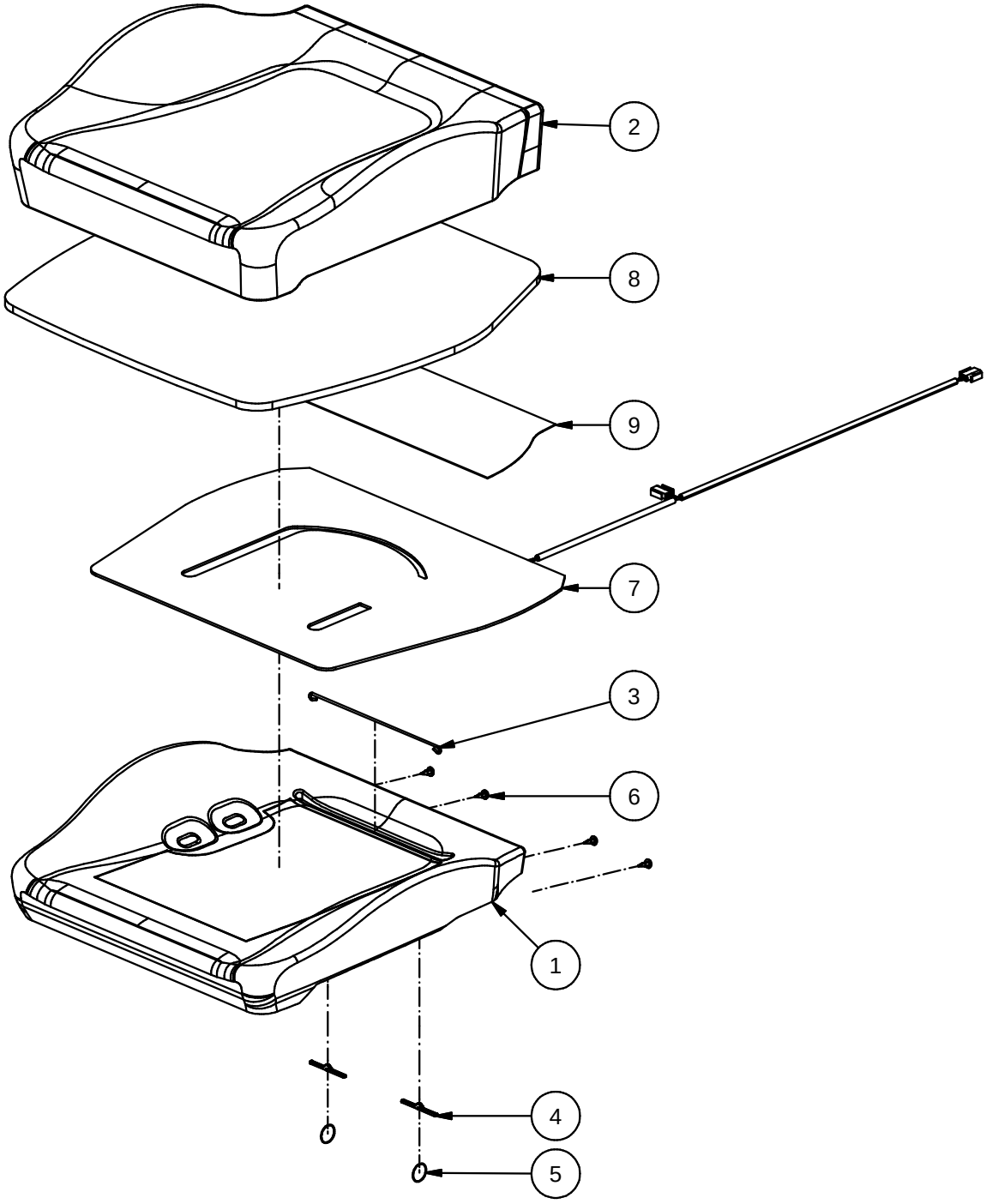

Fig.	Part. No.	Quantity	Description		
1	620453	1	FOAM SEAT CUSHION AIRVENT		
2	641329	1	TRIM CUSHION		NIGHTFALL
3	620140	1	BRACKET L=230		
4	621404	2	BARETT PIN		
5	660057	2	LOOPS 30 MM		
6	500214	4	PLASTIC RIVET		
7	621095	1	HEATING ELEMENT 12V AIRVENT		CUSHION
8	640016	1	POLYESTER WAD 10 MM SEAT		
9	640014	1	TRIM AIRVENT SEAT		

Be-Ge Industri AB • Box 912 • S-572 29 Oskarshamn • Sweden • Phone +46(0)491761800 • Fax +46(0)49181900

BE - GE
Establ. 1934

Parts Replacements List

628598

TRIM KIT SEAT AIR 24V NIGHTFALL

Valid from 040506 to

Doc.	R1-628598
Date	120531
Rev.	0
Rev.Date	

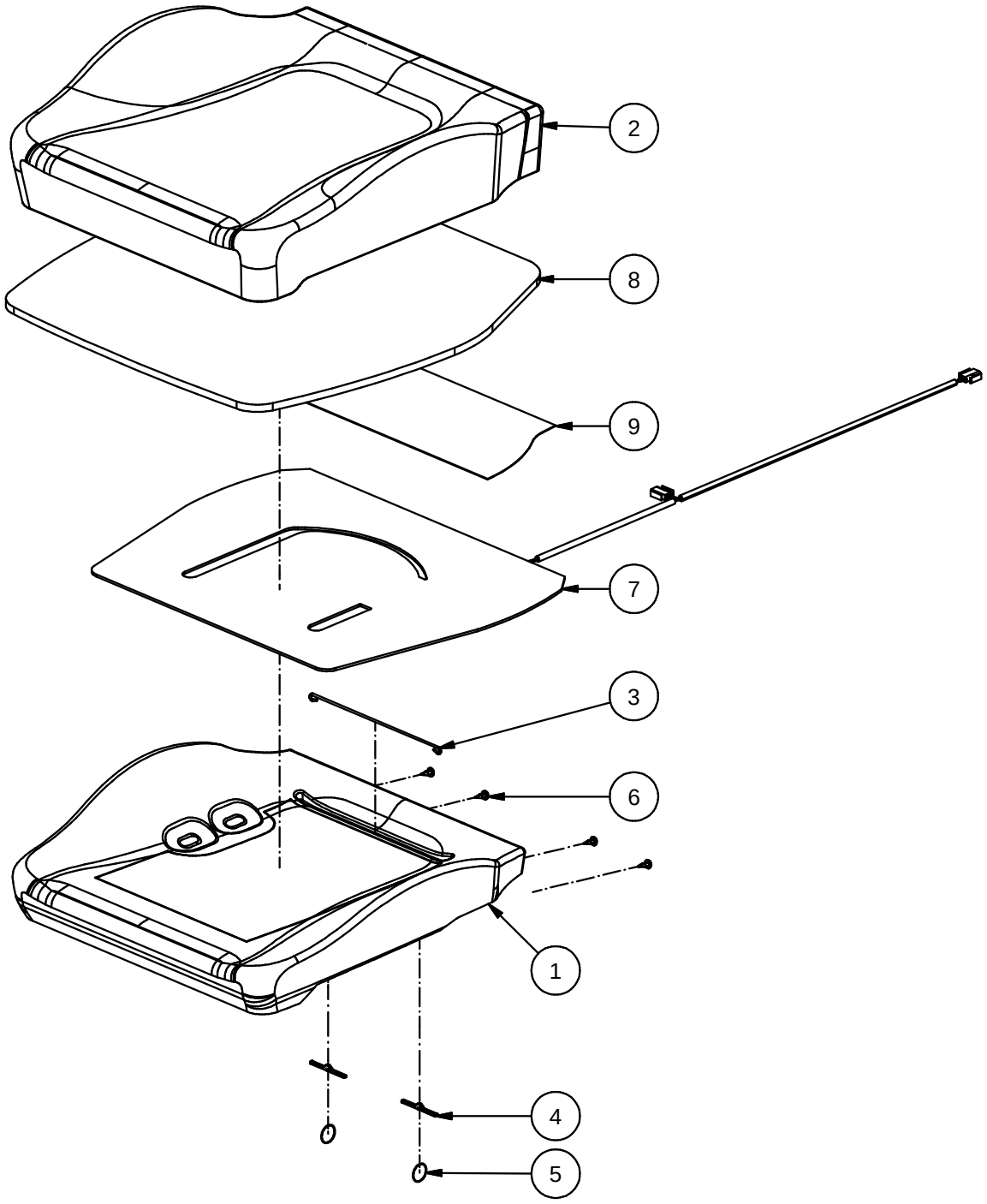

Fig.	Part. No.	Quantity	Description		
1	620453	1	FOAM SEAT CUSHION AIRVENT		
2	641329	1	TRIM CUSHION		NIGHTFALL
3	620140	1	BRACKET L=230		
4	621404	2	BARETT PIN		
5	660057	2	LOOPS 30 MM		
6	500214	4	PLASTIC RIVET		
7	621094	1	HEATING ELEMENT 24V AIRVENT		CUSHION
8	640016	1	POLYESTER WAD 10 MM SEAT		
9	640014	1	TRIM AIRVENT SEAT		

Be-Ge Industri AB • Box 912 • S-572 29 Oskarshamn • Sweden • Phone +46(0)491761800 • Fax +46(0)49181900

BE - GE Establ. 1934	Parts Replacements List **620313** **TRIM KIT SEAT CUSHION ART. LEATHER GREY 9000**	Doc. R1-620313 Date 120509 Rev. 0
	Valid from 900810 to	Rev.Date

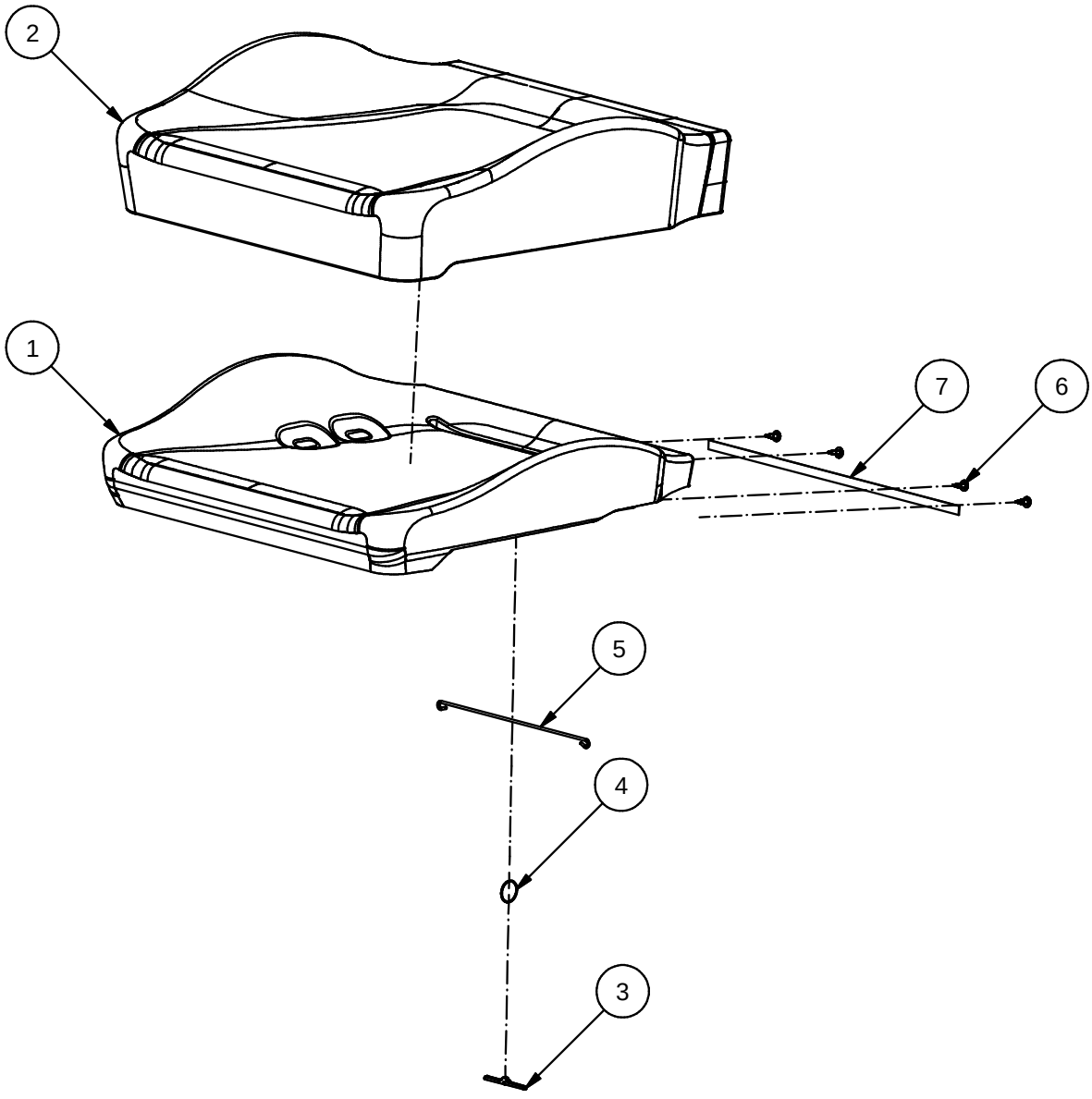

Fig.	Part. No.	Quantity	Description		
1	500190	1	FOAM CUSHION		
2	500958	1	TRIM CUSHION		ART. LEATHER GREY
3	621404	1	BARETT PIN		
4	660057	1	LOOPS 30 MM		
5	620140	1	BRACKET L=230		
6	500214	4	PLASTIC RIVET		
7	500281	1	PLASTIC STRIP		

Be-Ge Industri AB • Box 912 • S-572 29 Oskarshamn • Sweden • Phone +46(0)491761800 • Fax +46(0)49181900

BE - GE
Establ. 1934

Parts Replacements List

620319

TRIM KIT SEAT CUSHION CT ART. LEA. GREY 9000

Valid from 900810 to

Doc.	R1-620319
Date	120509
Rev.	0
Rev.Date	

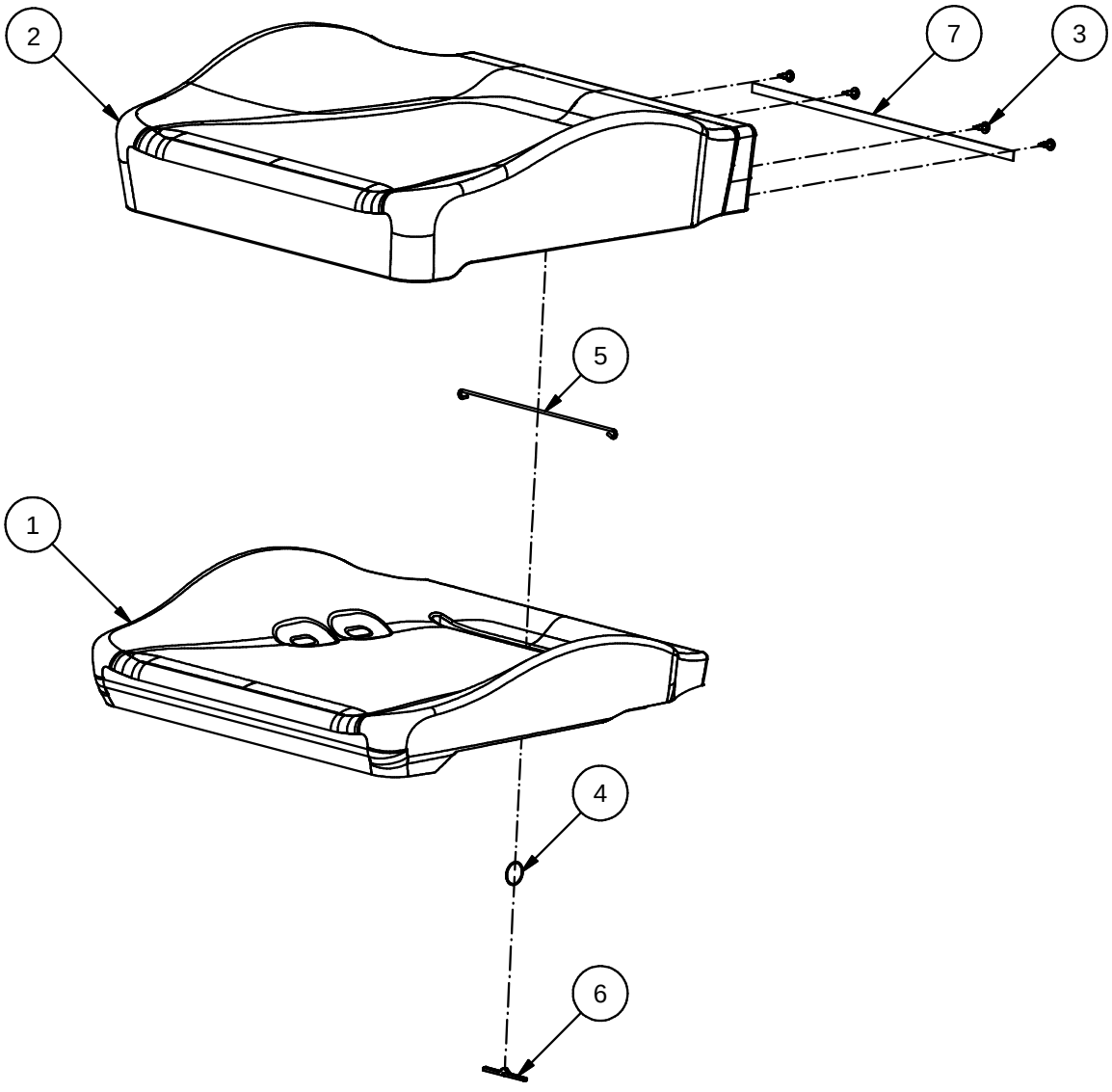

Fig.	Part. No.	Quantity	Description		
1	500189	1	FOAM CUSHION		
2	500958	1	TRIM CUSHION		ART. LEATHER GREY
3	500214	4	PLASTIC RIVET		
4	660057	1	LOOPS 30 MM		
5	620140	1	BRACKET L=230		
6	621404	1	BARETT PIN		
7	500281	1	PLASTIC STRIP		

Be-Ge Industri AB • Box 912 • S-572 29 Oskarshamn • Sweden • Phone +46(0)491761800 • Fax +46(0)49181900

BE - GE
Establ. 1934

Parts Replacements List

620323

TRIM KIT SEAT CUSHION LEATHER GREY 9000

Valid from 900810 to

Doc. R1-620323
Date 120613
Rev. 0
Rev.Date

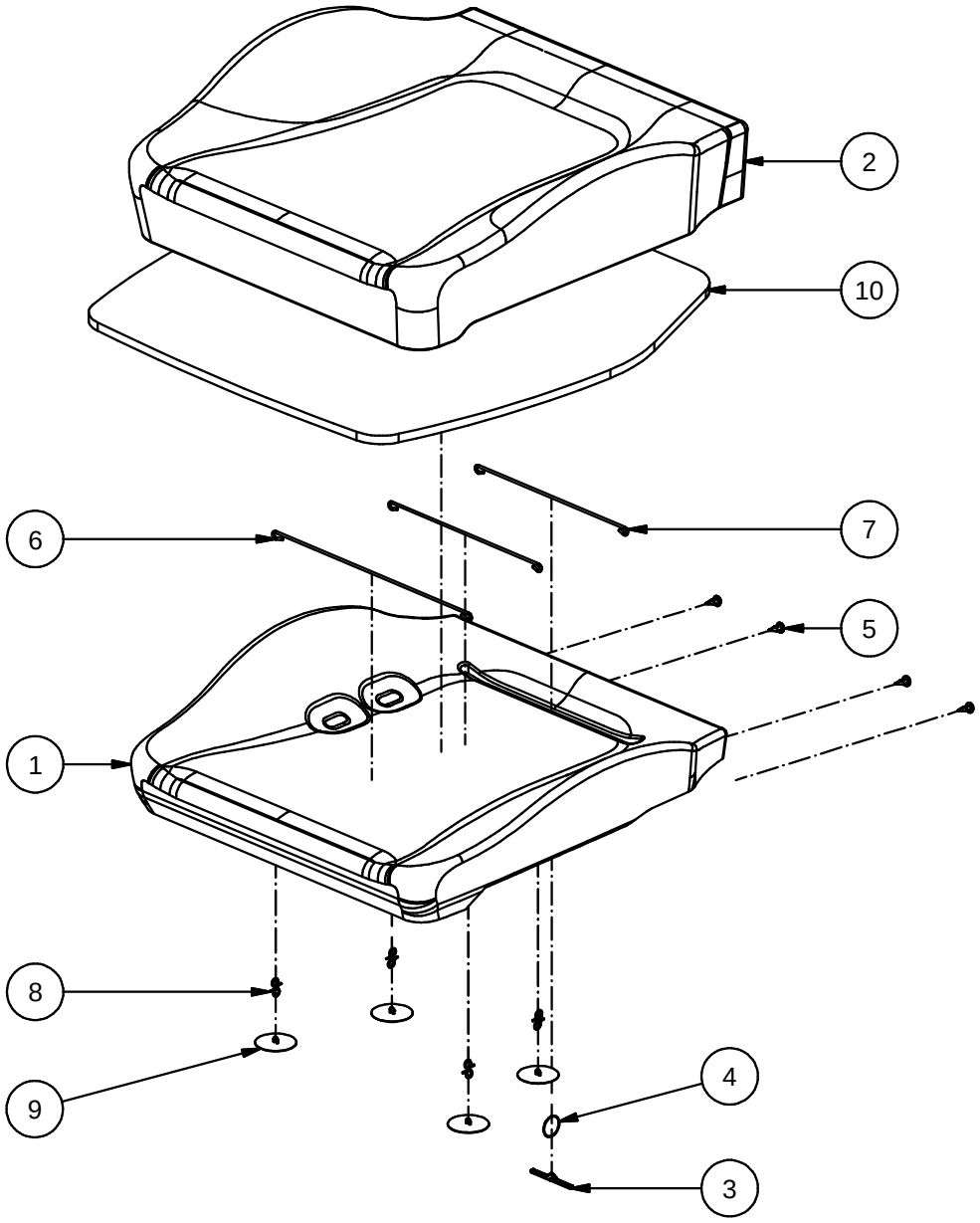

Fig.	Part. No.	Quantity	Description		
1	500190	1	FOAM CUSHION		
2	500586	1	TRIM CUSHION		LEATHER GREY BALTIQUE
3	621404	1	BARETT PIN		
4	660057	1	LOOPS 30 MM		
5	500214	4	PLASTIC RIVET		
6	620115	1	BRACKET L=300		
7	620140	2	BRACKET L=230		
8	660096	4	S-HOOK		L=22 Ø=1,5
9	500650	4	BACK BUTTON		Ø=22 WHITE
10	640016	1	POLYESTER WAD 10 MM SEAT		

Be-Ge Industri AB • Box 912 • S-572 29 Oskarshamn • Sweden • Phone +46(0)491761800 • Fax +46(0)49181900

BE - GE
Establ. 1934

Parts Replacements List

620329

TRIM KIT SEAT CUSHION LEATHER GREY 9000

Valid from 900810 to

Doc. R1-620329
Date 120613
Rev. 0
Rev.Date

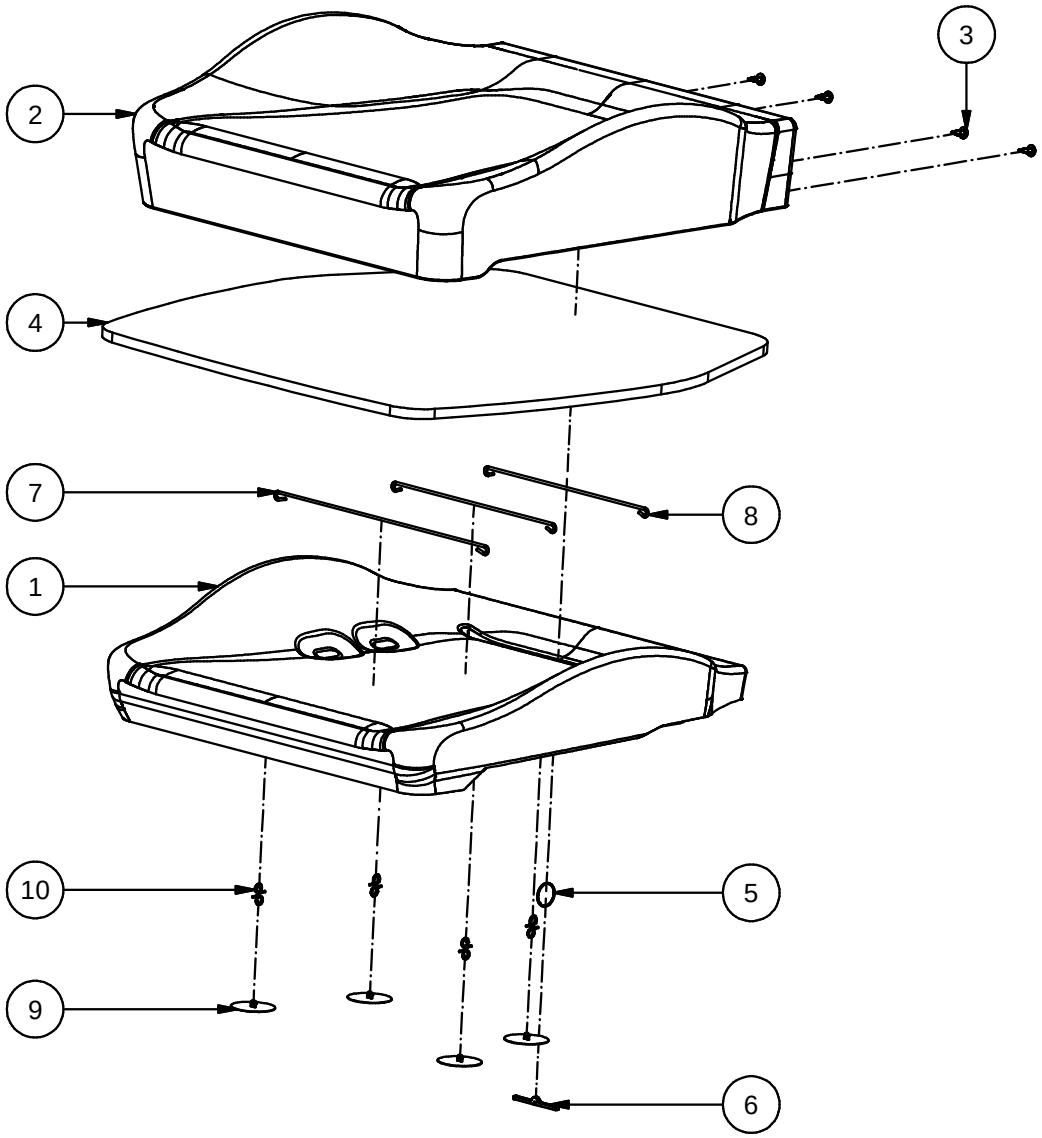

Fig.	Part. No.	Quantity	Description		
1	500189	1	FOAM CUSHION		
2	500586	1	TRIM CUSHION		LEATHER GREY BALTIQUE
3	500214	4	PLASTIC RIVET		
4	640016	1	POLYESTER WAD 10 MM SEAT		
5	660057	1	LOOPS 30 MM		
6	621404	1	BARETT PIN		
7	620115	1	BRACKET L=300		
8	620140	2	BRACKET L=230		
9	500650	4	BACK BUTTON		Ø=22 WHITE
10	660096	4	S-HOOK		L=22 Ø=1,5

Be-Ge Industri AB • Box 912 • S-572 29 Oskarshamn • Sweden • Phone +46(0)491761800 • Fax +46(0)49181900

BE - GE
Establ. 1934

Parts Replacements List

621133

TRIM KIT SEAT AIR 12V
CAMBORNE

Valid from 960308 to

Doc.	R1-621133
Date	120613
Rev.	0
Rev.Date	

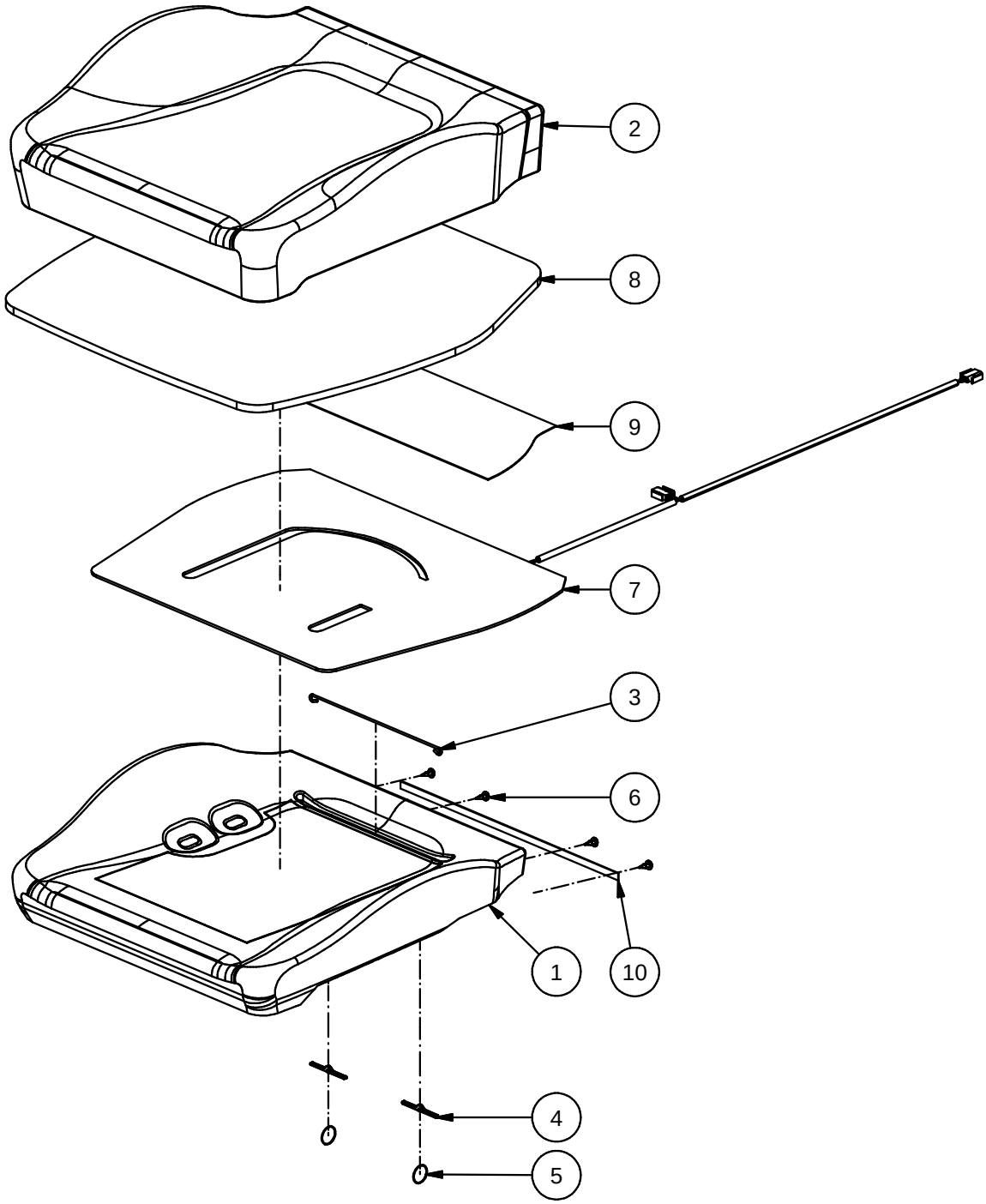

Fig.	Part. No.	Quantity	Description		
1	620453	1	FOAM SEAT CUSHION AIRVENT		
2	640467	1	TRIM CUSHION		CAMBORNE
3	620140	1	BRACKET L=230		
4	621404	2	BARETT PIN		
5	660057	2	LOOPS 30 MM		
6	500214	4	PLASTIC RIVET		
7	621095	1	HEATING ELEMENT 12V AIRVENT		CUSHION
8	640016	1	POLYESTER WAD 10 MM SEAT		
9	640014	1	TRIM AIRVENT SEAT		
10	500281	1	PLASTIC STRIP		

Be-Ge Industri AB • Box 912 • S-572 29 Oskarshamn • Sweden • Phone +46(0)491761800 • Fax +46(0)49181900

BE-GE Establ. 1934	Parts Replacements List **628104** **TRIM KIT SEAT AIR 24V CAMBORNE**	Doc. R1-628104 Date 120613 Rev. 0
	Valid from 030108 to	Rev.Date

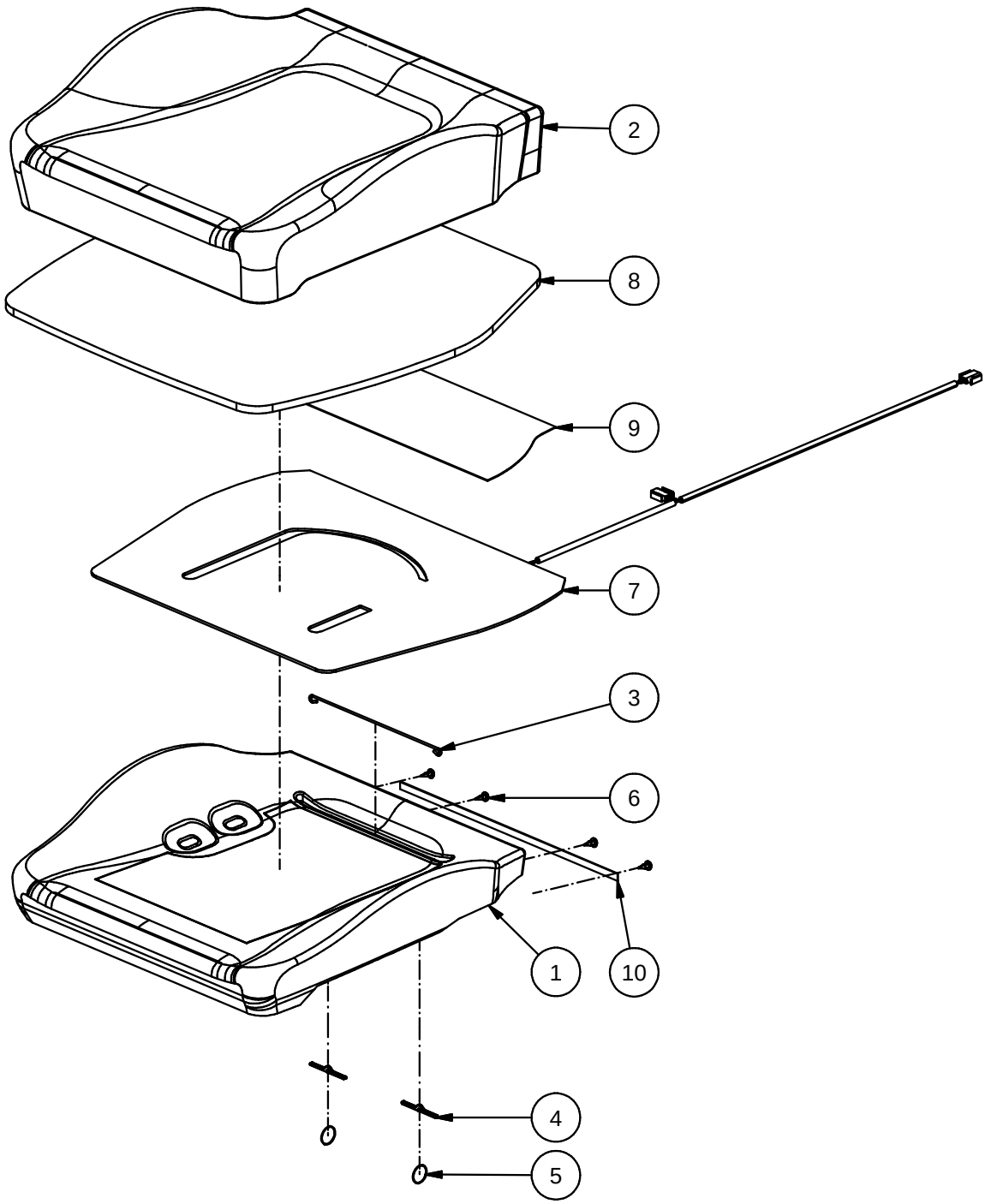

Fig.	Part. No.	Quantity	Description		
1	620453	1	FOAM SEAT CUSHION AIRVENT		
2	640467	1	TRIM CUSHION		CAMBORNE
3	620140	1	BRACKET L=230		
4	621404	2	BARETT PIN		
5	660057	2	LOOPS 30 MM		
6	500214	4	PLASTIC RIVET		
7	621094	1	HEATING ELEMENT 24V AIRVENT		CUSHION
8	640016	1	POLYESTER WAD 10 MM SEAT		
9	640014	1	TRIM AIRVENT SEAT		
10	500281	1	PLASTIC STRIP		

Be-Ge Industri AB • Box 912 • S-572 29 Oskarshamn • Sweden • Phone +46(0)491761800 • Fax +46(0)49181900

BE - GE
Establ. 1934

Parts Replacements List

620903

TRIM KIT SEAT CUSHION PLUSH BLUE 84 9000

Valid from 930208 to

Doc. R1-620903
Date 120509
Rev. 0
Rev.Date

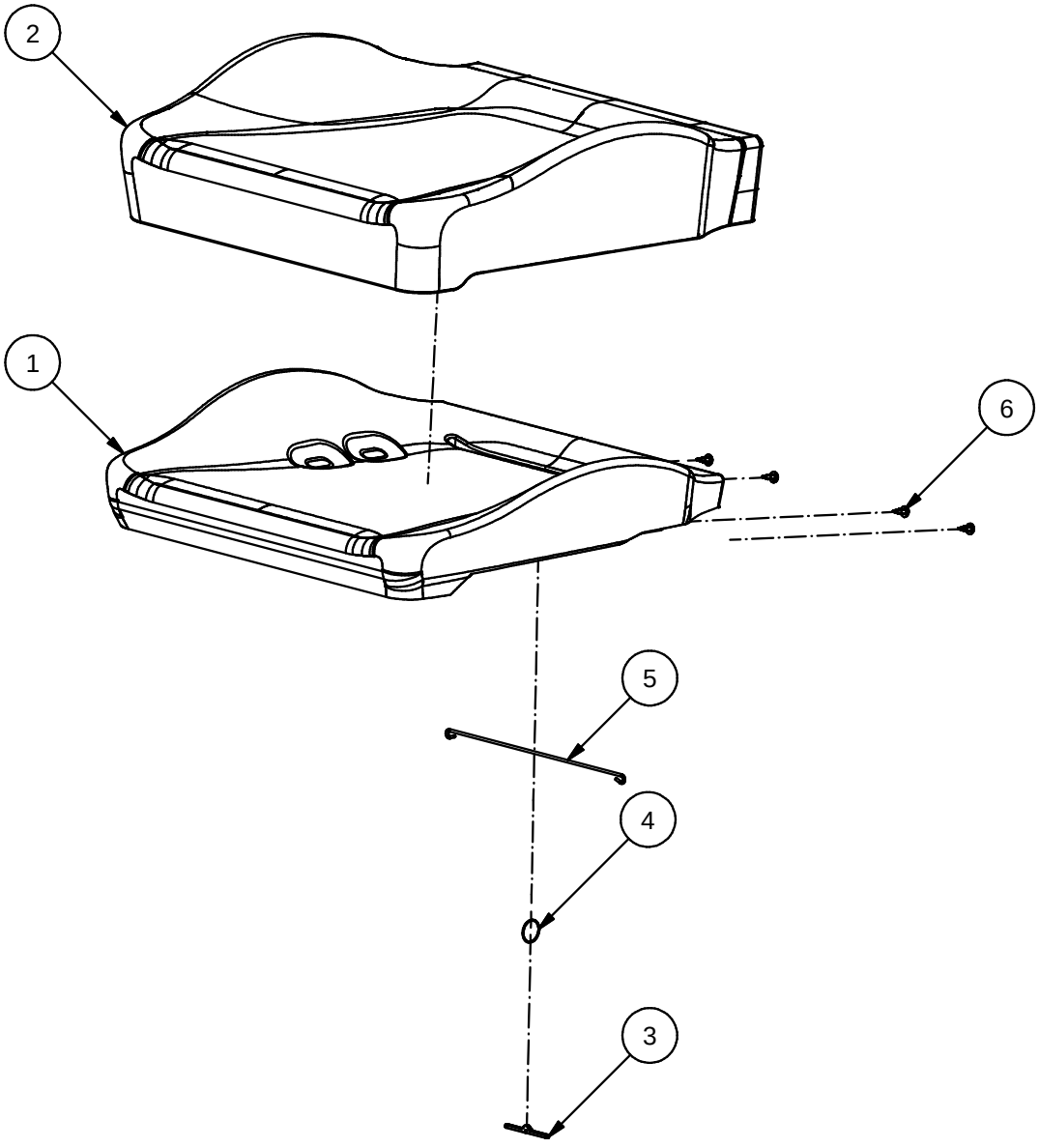

Fig.	Part. No.	Quantity	Description		
1	500190	1	FOAM CUSHION		
2	640315	1	TRIM CUSHION		PLUSH BLUE 84
3	621404	1	BARETT PIN		
4	660057	1	LOOPS 30 MM		
5	620114	1	BRACKET L=260		
6	500214	4	PLASTIC RIVET		

Be-Ge Industri AB • Box 912 • S-572 29 Oskarshamn • Sweden • Phone +46(0)491761800 • Fax +46(0)49181900

BE - GE
Establ. 1934

Parts Replacements List

620909

TRIM KIT SEAT CUSHION CT PLUSH BLUE 84 9000

Valid from 930208 to

Doc. R1-620909
Date 120511
Rev. 0
Rev.Date

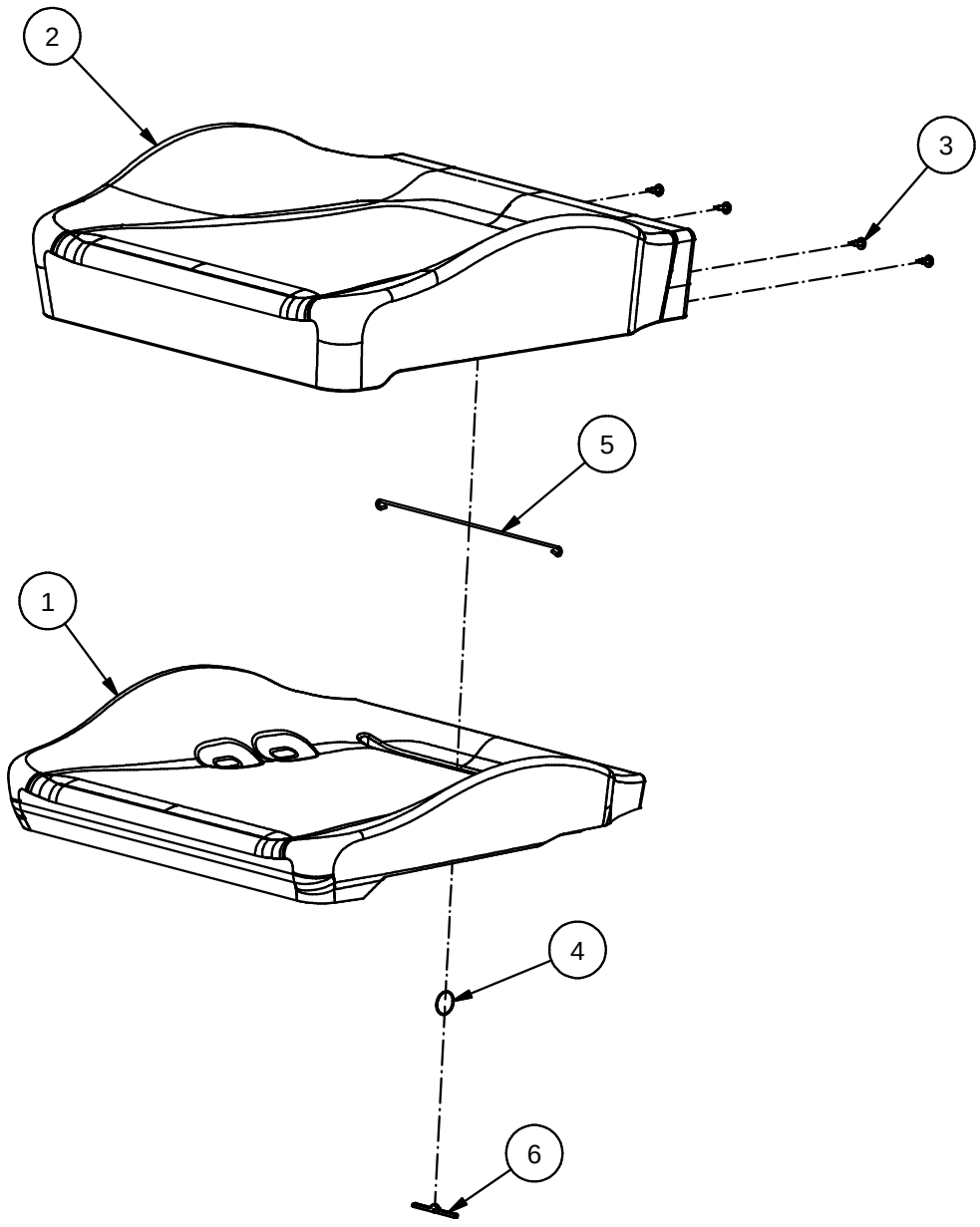

Fig.	Part. No.	Quantity	Description		
1	500189	1	FOAM CUSHION		
2	640315	1	TRIM CUSHION		PLUSH BLUE 84
3	500214	4	PLASTIC RIVET		
4	660057	1	LOOPS 30 MM		
5	620114	1	BRACKET L=260		
6	621404	1	BARETT PIN		

Be-Ge Industri AB • Box 912 • S-572 29 Oskarshamn • Sweden • Phone +46(0)491761800 • Fax +46(0)49181900

BE - GE
Establ. 1934

Parts Replacements List

620923

TRIM KIT SEAT CUSHION PLUSH RED 82 9000

Valid from 930208 to

Doc.	R1-620923
Date	120612
Rev.	0
Rev.Date	

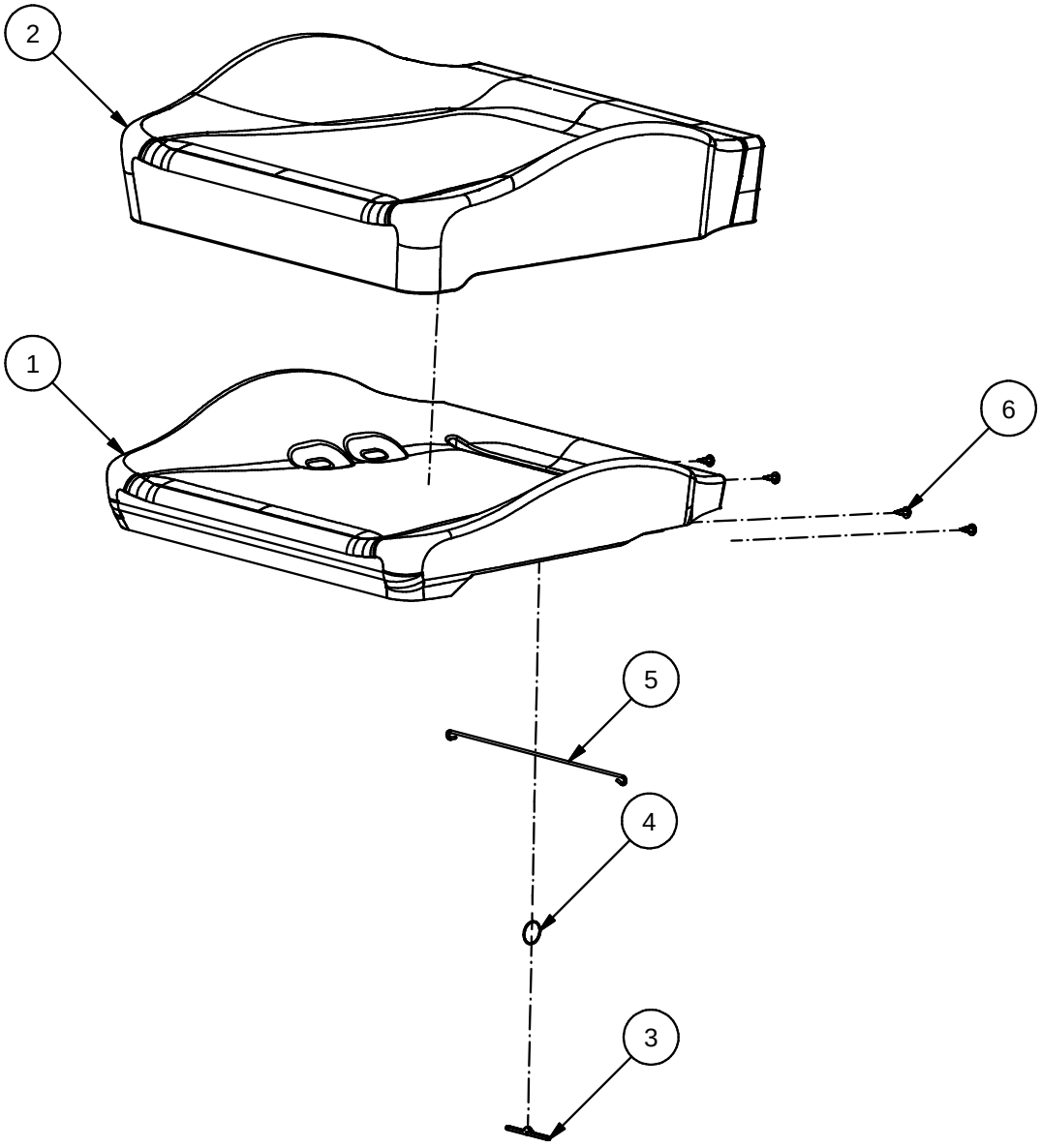

Fig.	Part. No.	Quantity	Description		
1	500190	1	FOAM CUSHION		
2	640275	1	TRIM CUSHION		PLUSH RED 82
3	621404	1	BARETT PIN		
4	660057	1	LOOPS 30 MM		
5	620114	1	BRACKET L=260		
6	500214	4	PLASTIC RIVET		

Be-Ge Industri AB • Box 912 • S-572 29 Oskarshamn • Sweden • Phone +46(0)491761800 • Fax +46(0)49181900

BE - GE
Establ. 1934

Parts Replacements List

620929

TRIM KIT SEAT CUSHION CT PLUSH RED 82 9000

Valid from 930208 to

Doc. R1-620929
Date 120611
Rev. 0
Rev.Date

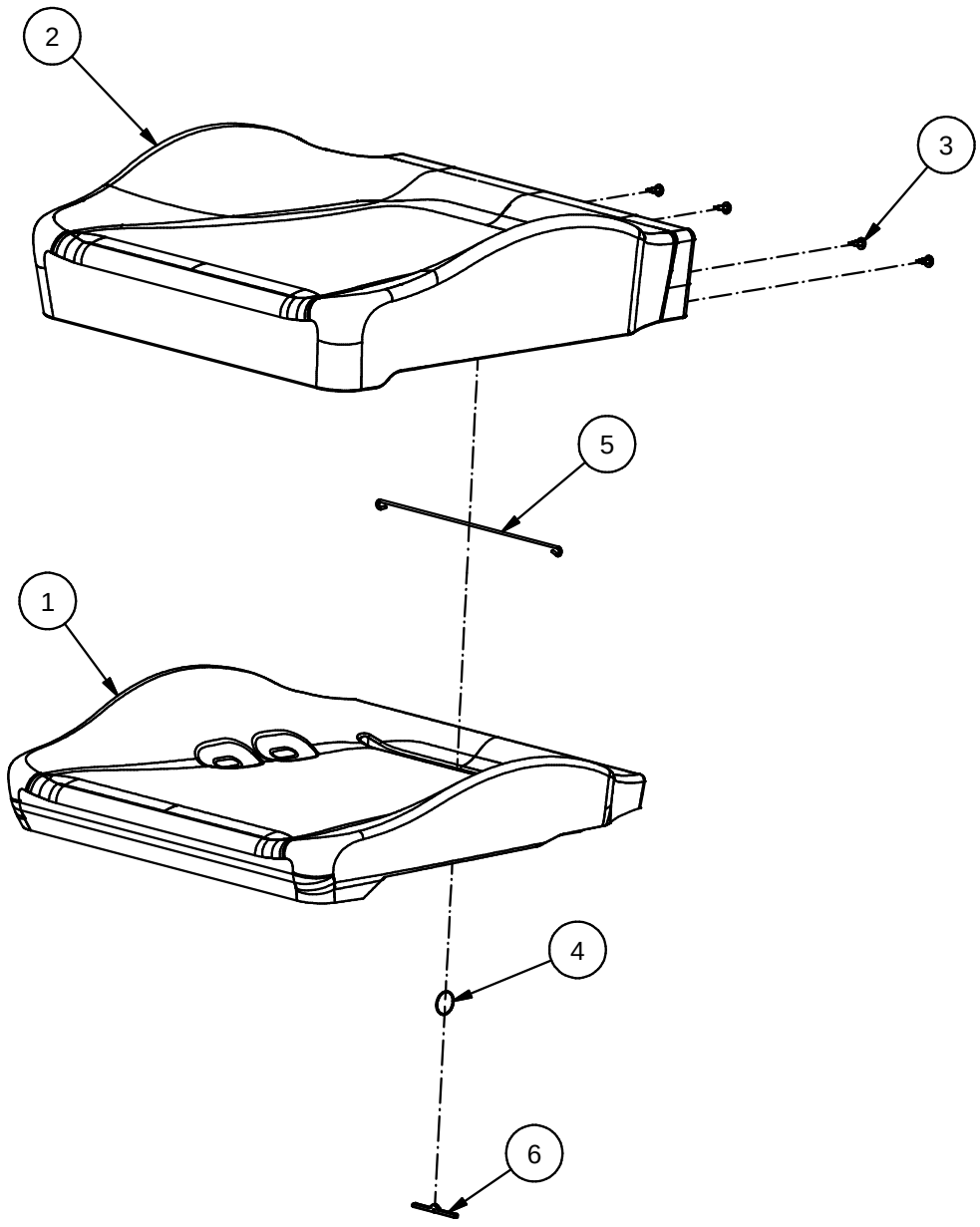

Fig.	Part. No.	Quantity	Description		
1	500189	1	FOAM CUSHION		
2	640275	1	TRIM CUSHION		PLUSH RED 82
3	500214	4	PLASTIC RIVET		
4	660057	1	LOOPS 30 MM		
5	620114	1	BRACKET L=260		
6	621404	1	BARETT PIN		

Be-Ge Industri AB • Box 912 • S-572 29 Oskarshamn • Sweden • Phone +46(0)491761800 • Fax +46(0)49181900

BE - GE
Establ. 1934

Parts Replacements List

620943

TRIM KIT SEAT CUSHION PLUSH GREY 89 9000

Valid from 930208 to

Doc.	R1-620943
Date	120511
Rev.	0
Rev.Date	

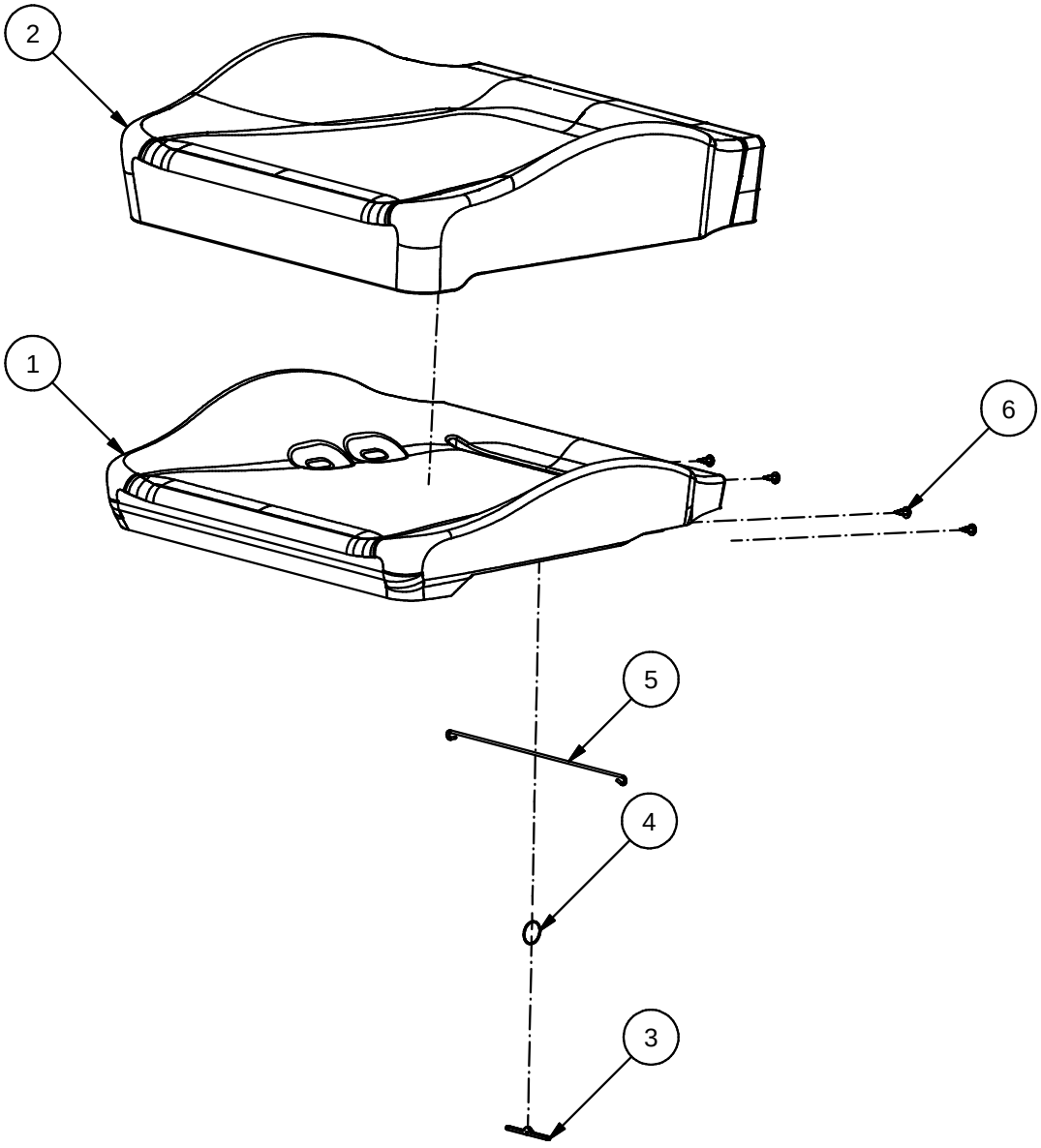

Fig.	Part. No.	Quantity	Description		
1	500190	1	FOAM CUSHION		
2	640335	1	TRIM CUSHION		PLUSH GREY 89
3	621404	1	BARETT PIN		
4	660057	1	LOOPS 30 MM		
5	620114	1	BRACKET L=260		
6	500214	4	PLASTIC RIVET		

Be-Ge Industri AB • Box 912 • S-572 29 Oskarshamn • Sweden • Phone +46(0)491761800 • Fax +46(0)49181900

BE - GE
Establ. 1934

Parts Replacements List

620949

TRIM KIT SEAT CUSHION CT PLUSH GREY 89 9000

Valid from 930208 to

Doc. R1-620949
Date 120511
Rev. 0
Rev.Date

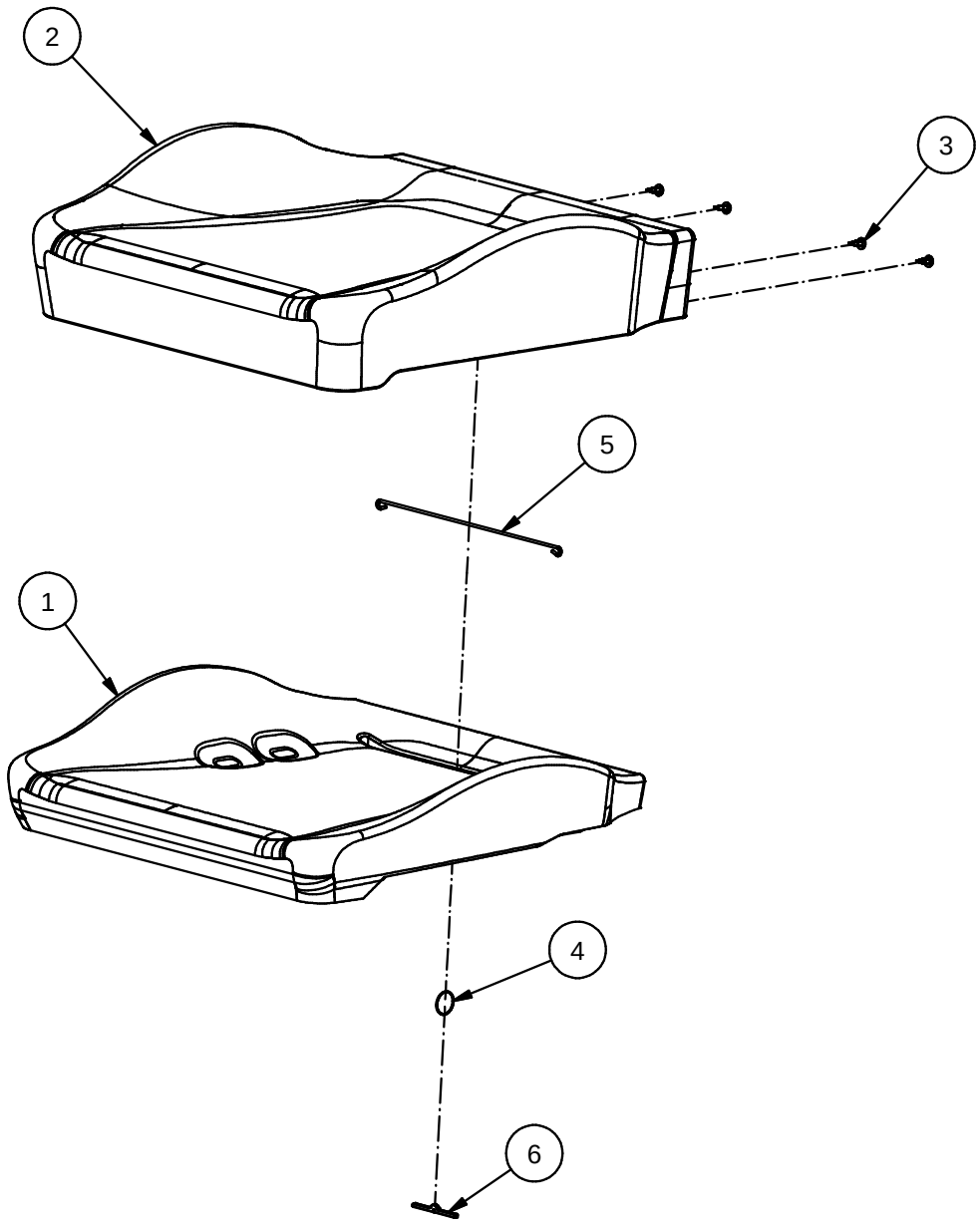

Fig.	Part. No.	Quantity	Description		
1	500189	1	FOAM CUSHION		
2	640335	1	TRIM CUSHION		PLUSH GREY 89
3	500214	4	PLASTIC RIVET		
4	660057	1	LOOPS 30 MM		
5	620114	1	BRACKET L=260		
6	621404	1	BARETT PIN		

Be-Ge Industri AB • Box 912 • S-572 29 Oskarshamn • Sweden • Phone +46(0)491761800 • Fax +46(0)49181900

BE - GE
Establ. 1934

Parts Replacements List

620963

TRIM KIT SEAT CUSHION PLUSH BLACK 83 9000

Valid from 930208 to

Doc.	R1-620963
Date	120511
Rev.	0
Rev.Date	

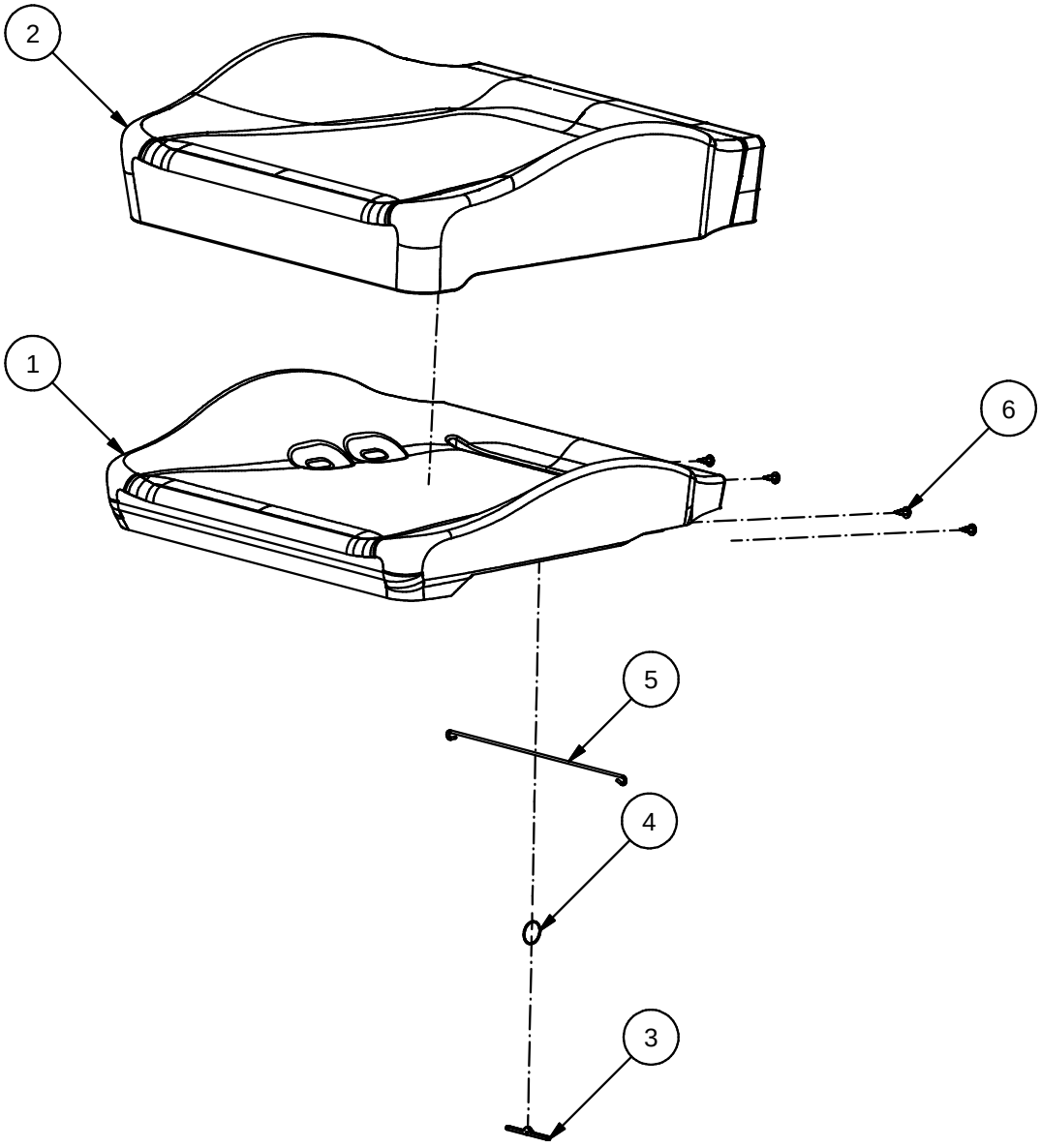

Fig.	Part. No.	Quantity	Description		
1	500190	1	FOAM CUSHION		
2	640295	1	TRIM CUSHION		PLUSH BLACK 83
3	621404	1	BARETT PIN		
4	660057	1	LOOPS 30 MM		
5	620114	1	BRACKET L=260		
6	500214	4	PLASTIC RIVET		

Be-Ge Industri AB • Box 912 • S-572 29 Oskarshamn • Sweden • Phone +46(0)491761800 • Fax +46(0)49181900

BE - GE
Establ. 1934

Parts Replacements List

620969

TRIM KIT SEAT CUSHION CT PLUSH BLACK 83 9000

Valid from 920504 to

Doc. R1-620969
Date 120511
Rev. 0
Rev.Date

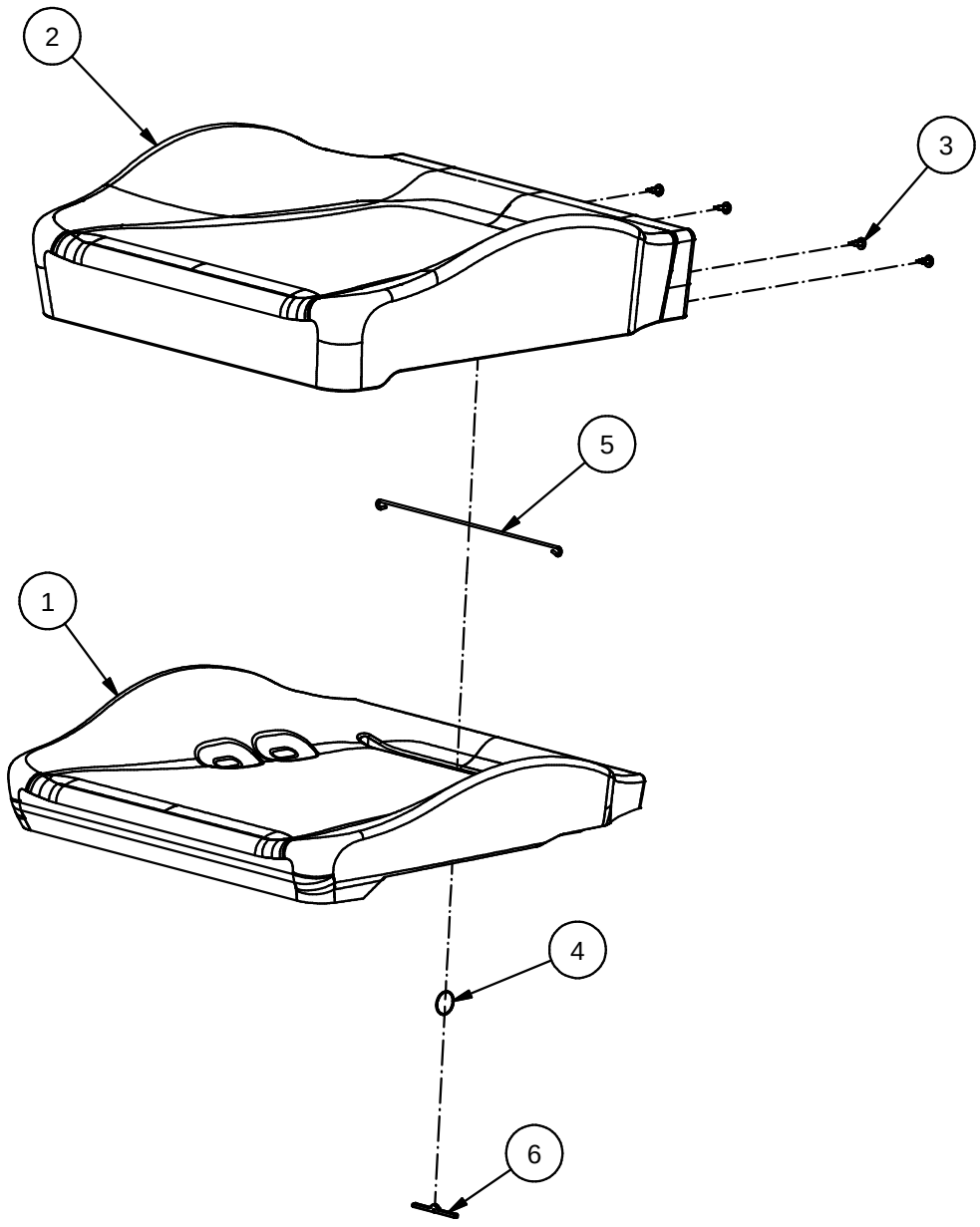

Fig.	Part. No.	Quantity	Description		
1	500189	1	FOAM CUSHION		
2	640295	1	TRIM CUSHION		PLUSH BLACK 83
3	500214	4	PLASTIC RIVET		
4	660057	1	LOOPS 30 MM		
5	620114	1	BRACKET L=260		
6	621404	1	BARETT PIN		

Be-Ge Industri AB • Box 912 • S-572 29 Oskarshamn • Sweden • Phone +46(0)491761800 • Fax +46(0)49181900

BE - GE	Parts Replacements List **628588** **TRIM KIT BACKREST 640 NIGHTFALL 9000**	Doc. R1-628588 Date 100928 Rev. 0
	Valid from 040506 to	Rev.Date

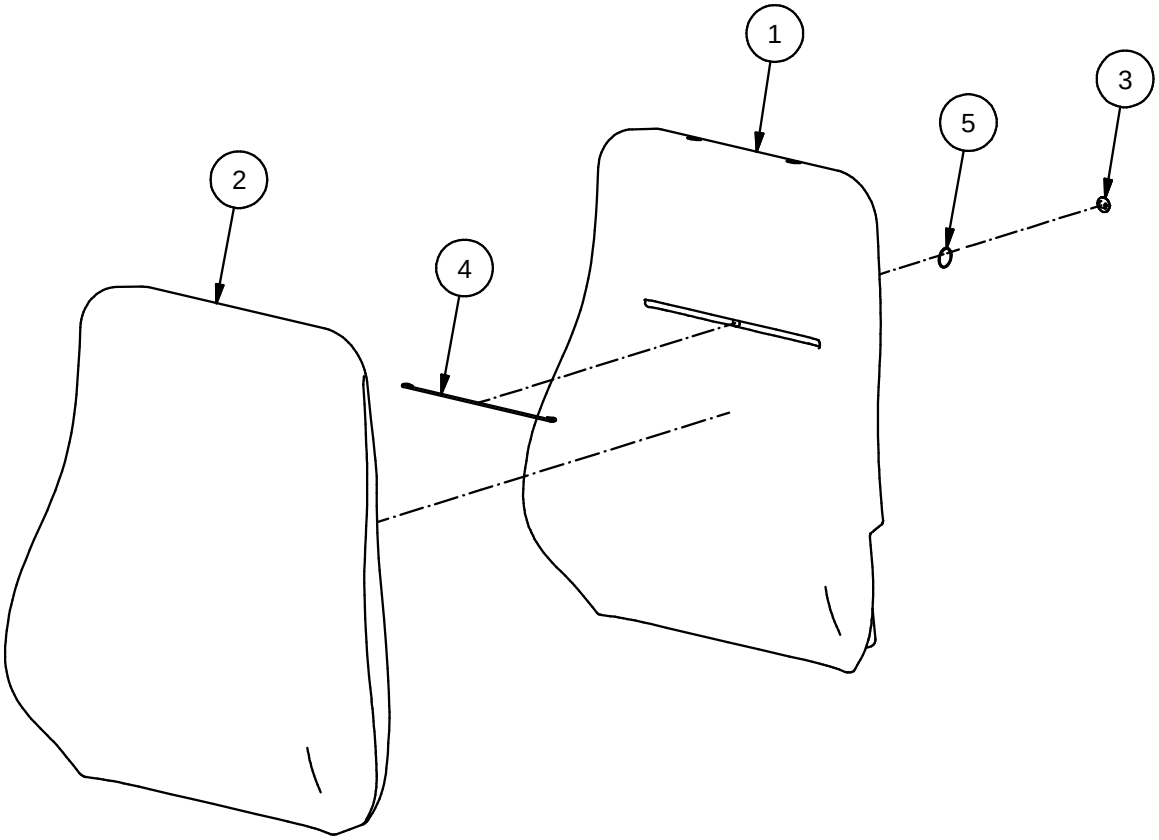

Fig.	Part. No.	Quantity	Description		
1	500191	1	FOAM BACKREST		
2	641323	1	TRIM BACKREST 640		NIGHTFALL
3	660054	1	BUTTOM SPK		
4	620140	1	BRACKET L=230		
5	660057	1	LOOPS 30 MM		

Be-Ge Industri AB • Box 912 • S-572 29 Oskarshamn • Sweden • Phone +46(0)491761800 • Fax +46(0)49181900

BE - GE	Parts Replacements List **628592** **TRIM KIT BACKREST 640 EPN NIGHTFALL 9000**	Doc. R1-628592 Date 1201016 Rev. 0
	Valid from 040506 to	Rev.Date

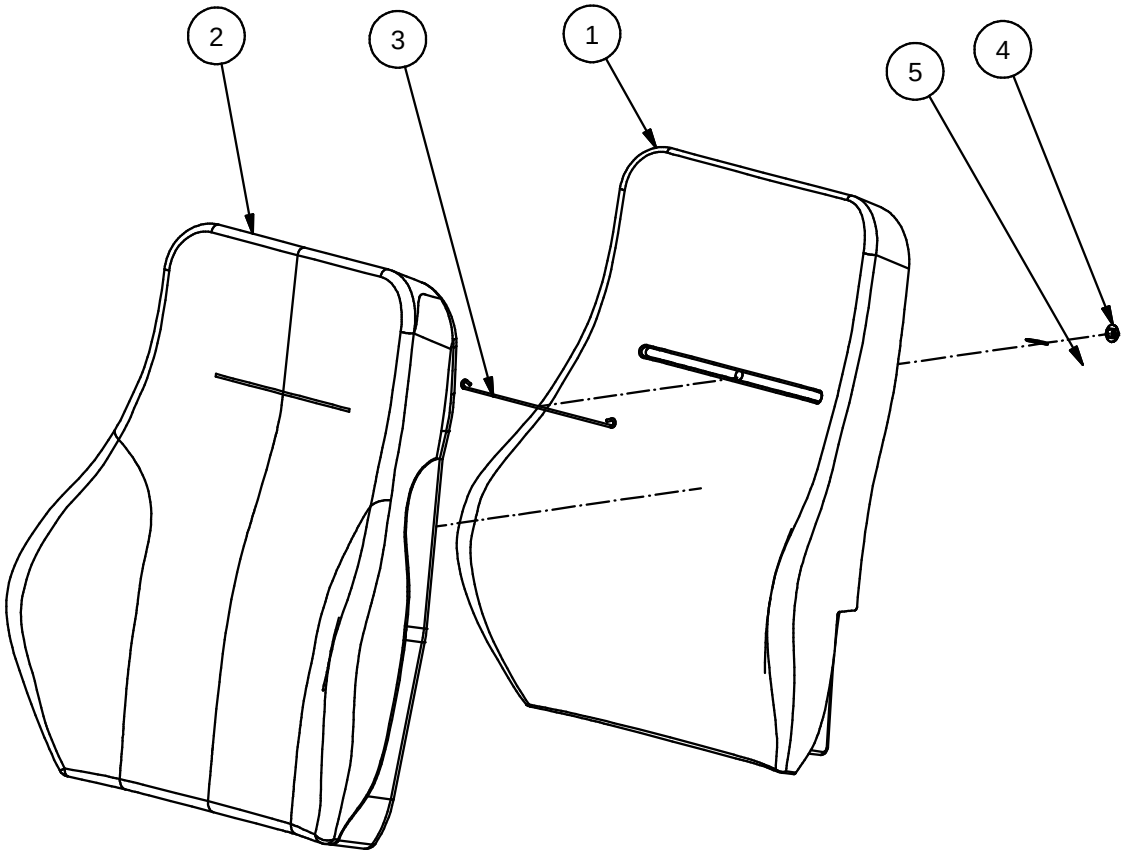

Fig.	Part. No.	Quantity	Description		
1	621389	1	FOAM BACKREST 640 EPN		
2	641326	1	TRIM BACKREST 640 EPN 9000		NIGHTFALL
3	620140	1	BRACKET L=230		
4	660054	1	BUTTOM SPK		
5	660057	1	LOOPS 30 MM		

Be-Ge Industri AB • Box 912 • S-572 29 Oskarshamn • Sweden • Phone +46(0)491761800 • Fax +46(0)49181900

BE - GE	Parts Replacements List **628593** **TRIM BACKREST 640 AIRVENT 12V NIGHTFALL 9000**	Doc. R1-628593 Date 121016 Rev. 0
	Valid from 040506 to	Rev.Date

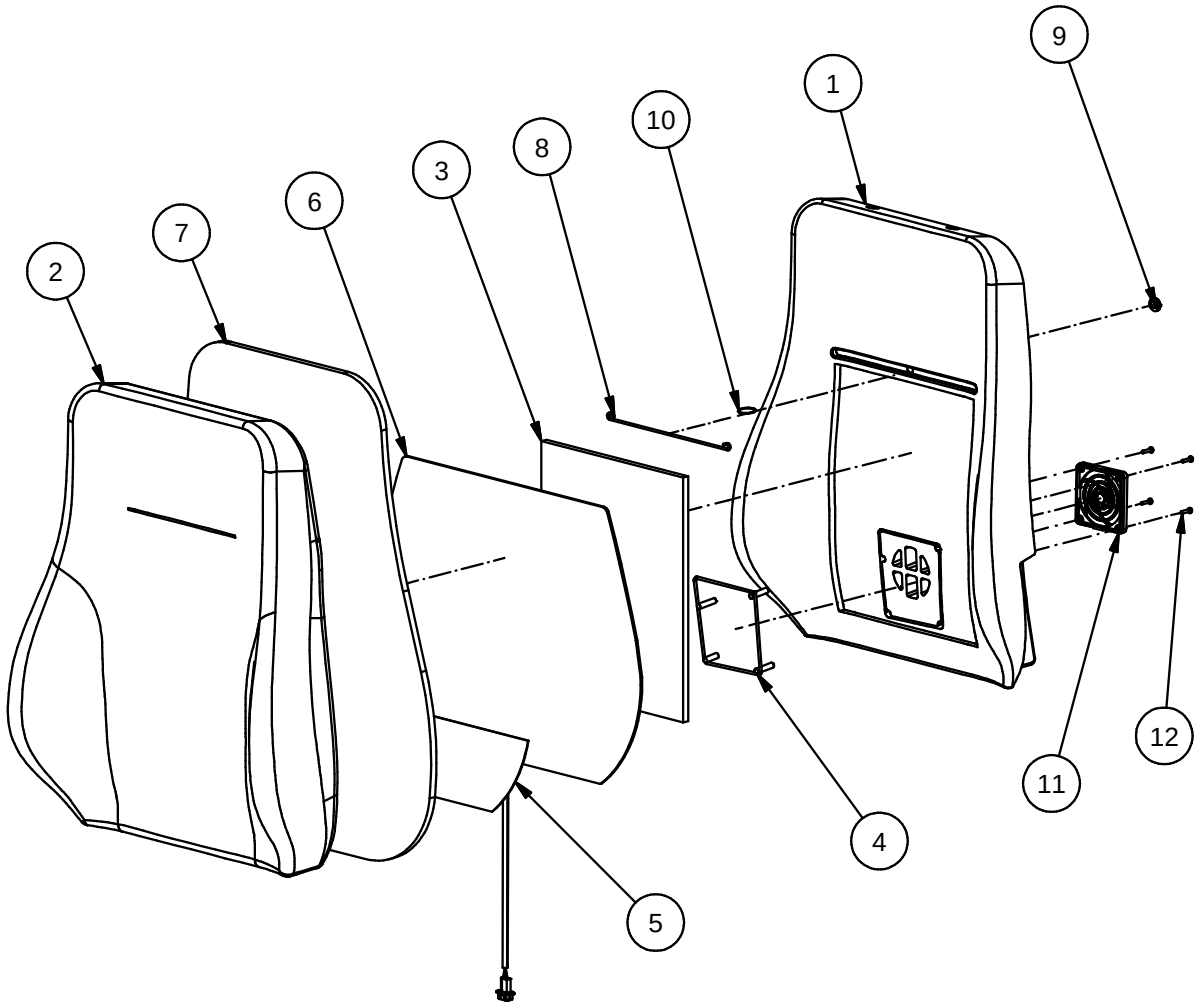

Fig.	Part. No.	Quantity	Description		
1	620454	1	FOAM BACKREST AIRVENT		
2	641327	1	TRIM BACKREST 640 AIR		NIGHTFALL
3	628237	1	RUBBER HAIR MATT		
4	620447	1	FIXTURE WIRE CPL.		
5	640015	1	TRIM AIRVENT BACKREST		
6	500350	1	HEATING ELEMENT 12V		SQUAB
7	640017	1	POLYESTER WAD 10 MM BACK REST		
8	620140	1	BRACKET L=230		
9	660054	1	BUTTOM SPK		
10	660057	1	LOOPS 30 MM		
11	621140	1	FAN NET WITH HOLES		OEM ELECTRONICS AB ART. NO.: PF80
12	650018	4	SCREW RXS	ST3.5x19	DIN7981C-Z ZN-BL

Be-Ge Industri AB • Box 912 • S-572 29 Oskarshamn • Sweden • Phone +46(0)491761800 • Fax +46(0)49181900

BE - GE	Parts Replacements List **628595** **TRIM BACKREST 640 AIRVENT 24V NIGHTFALL 9000**	Doc. R1-628595 Date 121016 Rev. 0
	Valid from 040506 to	Rev.Date

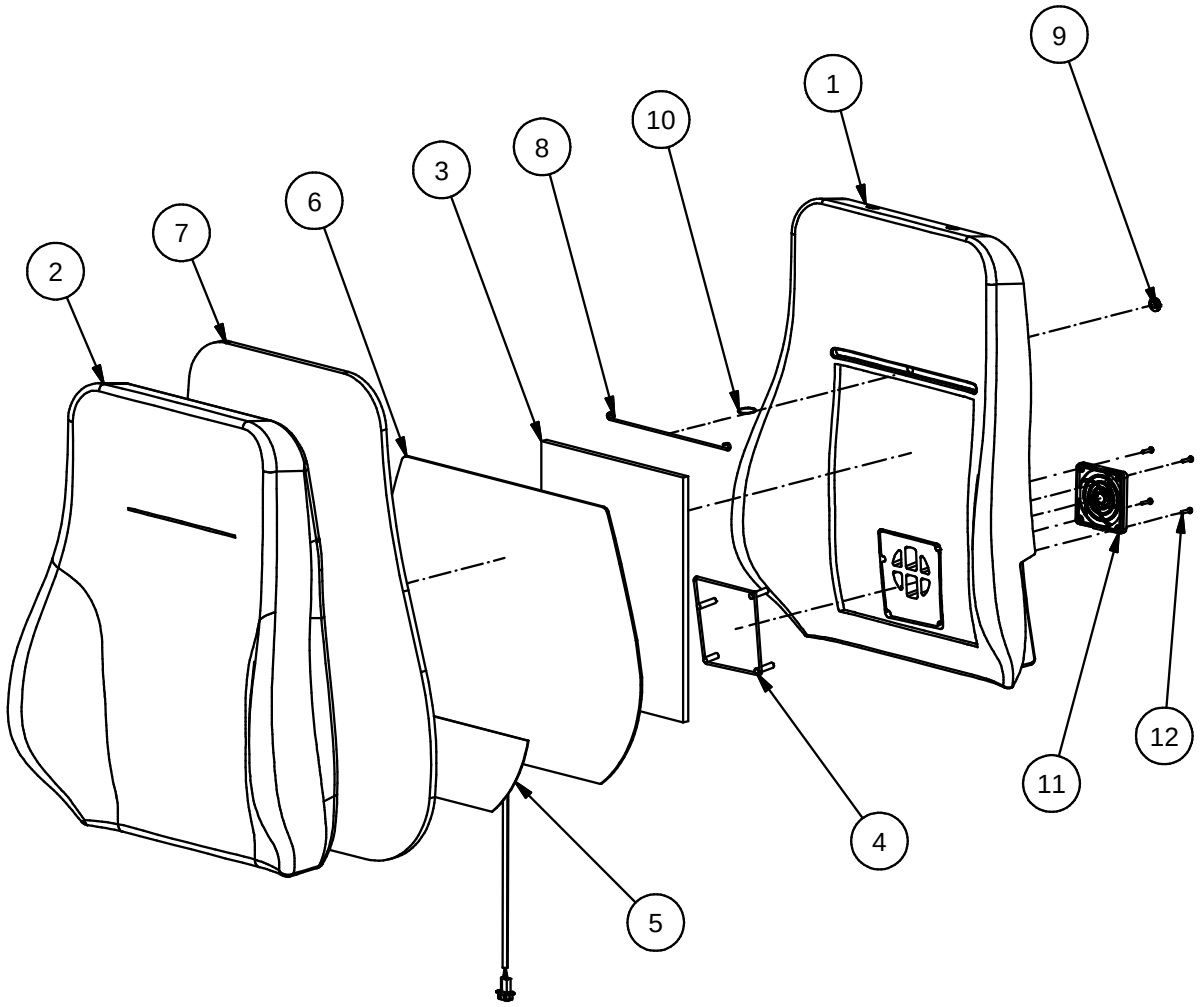

Fig.	Part. No.	Quantity	Description		
1	620454	1	FOAM BACKREST AIRVENT		
2	641327	1	TRIM BACKREST 640 AIR		NIGHTFALL
3	628237	1	RUBBER HAIR MATT		
4	620447	1	FIXTURE WIRE CPL.		
5	640015	1	TRIM AIRVENT BACKREST		
6	500358	1	HEATING ELEMENT 24V		SQUAB
7	640017	1	POLYESTER WAD 10 MM BACK REST		
8	620140	1	BRACKET L=230		
9	660054	1	BUTTOM SPK		
10	660057	1	LOOPS 30 MM		
11	621140	1	FAN NET WITH HOLES		OEM ELECTRONICS AB ART. NO.: PF80
12	650018	4	SCREW RXS	ST3.5x19	DIN7981C-Z ZN-BL

Be-Ge Industri AB • Box 912 • S-572 29 Oskarshamn • Sweden • Phone +46(0)491761800 • Fax +46(0)49181900

BE - GE	Parts Replacements List **620310** **TRIM KIT BACKREST 640 ART. LEATHER GREY 9000**	Doc. R1-620310 Date 121016 Rev. 0
	Valid from 900810 to	Rev.Date

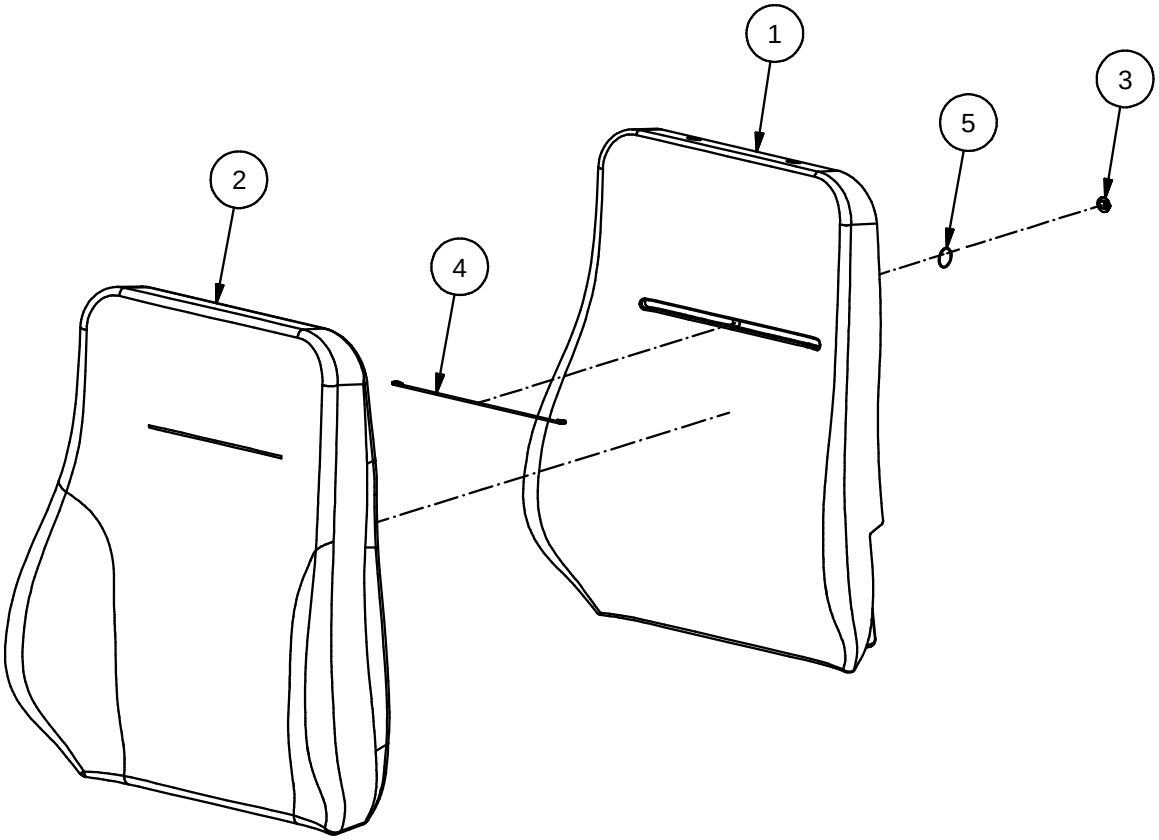

Fig.	Part. No.	Quantity	Description		
1	500191	1	FOAM BACKREST		
2	500951	1	TRIM BACKREST 640		ART. LEATHER GREY
3	660054	1	BUTTOM SPK		
4	620114	1	BRACKET L=260		
5	660057	1	LOOPS 30 MM		

Be-Ge Industri AB • Box 912 • S-572 29 Oskarshamn • Sweden • Phone +46(0)491761800 • Fax +46(0)49181900

BE - GE	Parts Replacements List **620320** **TRIM BACKREST 640 BALTIQUE GRAY 9000**	Doc. R1-620320 Date 121016 Rev. 0
	Valid from 900810 to	Rev.Date

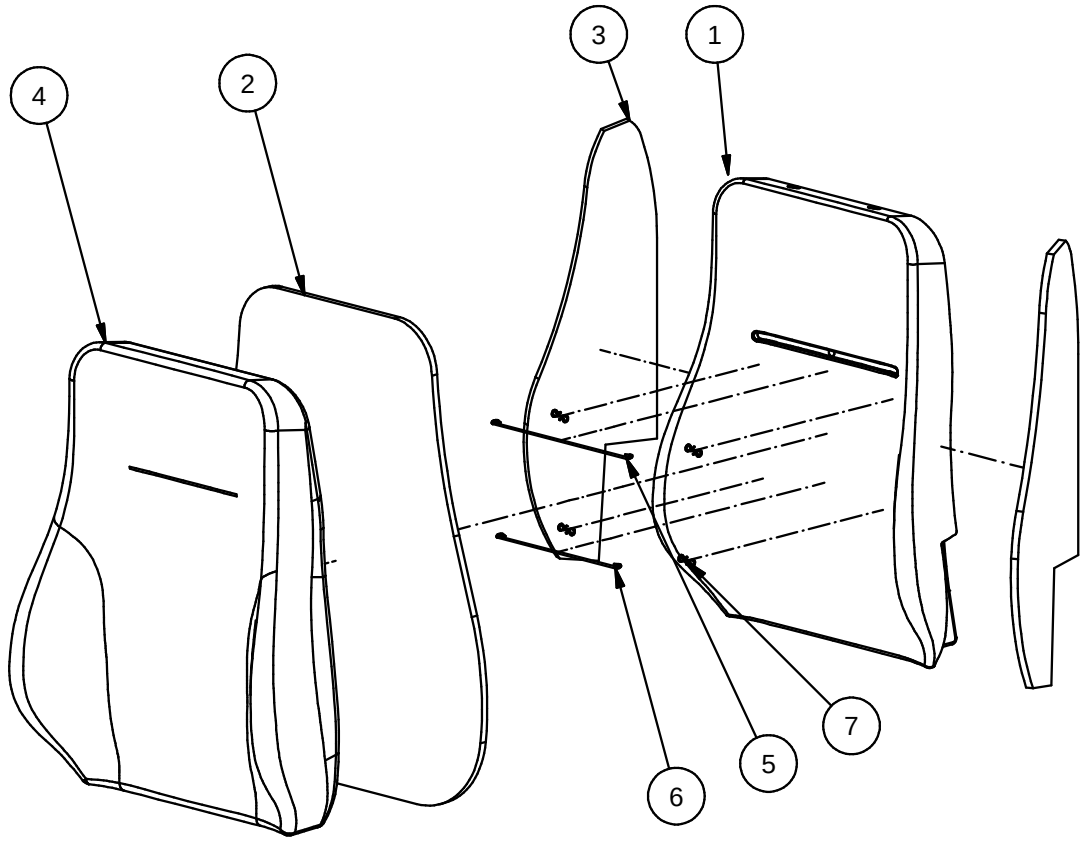

Fig.	Part. No.	Quantity	Description		
1	500191	1	FOAM BACKREST		
2	640017	1	POLYESTER WAD 10 MM BACK REST		
3	641053	2	POLYESTER WAD 10 MM BACKREST SIDE		
4	500596	1	TRIM BACKREST 640		LEATHER GREY BALTIQUE
5	620114	1	BRACKET L=260		
6	620140	1	BRACKET L=230		
7	660097	4	S HOOK		

Be-Ge Industri AB • Box 912 • S-572 29 Oskarshamn • Sweden • Phone +46(0)491761800 • Fax +46(0)49181900

BE - GE	Parts Replacements List **621134** **TRIM BACKREST 640 AIRVENT 12V 9000**	Doc. R1-621134 Date 121016 Rev. 0
	Valid from 960308 to	Rev.Date

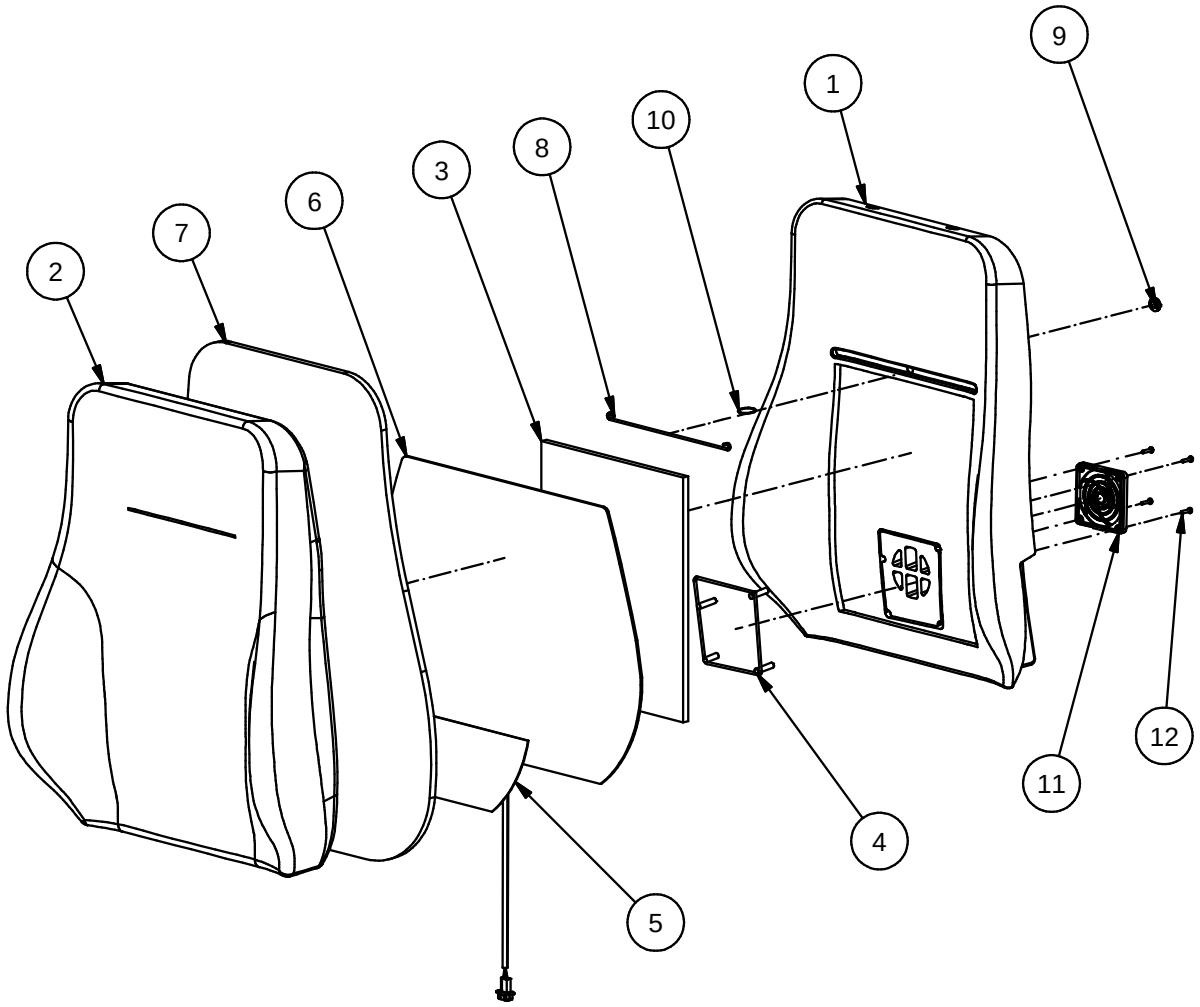

Fig.	Part. No.	Quantity	Description		
1	620454	1	FOAM BACKREST AIRVENT		
2	640466	1	TRIM BACKREST 640 AIR		CAMBORNE
3	628237	1	RUBBER HAIR MATT		
4	620447	1	FIXTURE WIRE CPL.		
5	640015	1	TRIM AIRVENT BACKREST		
6	500350	1	HEATING ELEMENT 12V		SQUAB
7	640017	1	POLYESTER WAD 10 MM BACK REST		
8	620140	1	BRACKET L=230		
9	660054	1	BUTTOM SPK		
10	660057	1	LOOPS 30 MM		
11	621140	1	FAN NET WITH HOLES		OEM ELECTRONICS AB ART. NO.: PF80
12	650018	4	SCREW RXS	ST3.5x19	DIN7981C-Z ZN-BL

Be-Ge Industri AB • Box 912 • S-572 29 Oskarshamn • Sweden • Phone +46(0)491761800 • Fax +46(0)49181900

BE - GE	Parts Replacements List **628107** **TRIM BACKREST 640 AIRVENT 24V** **9000**	Doc. R1-628107 Date 121016 Rev. 0
	Valid from 030108 to	Rev.Date

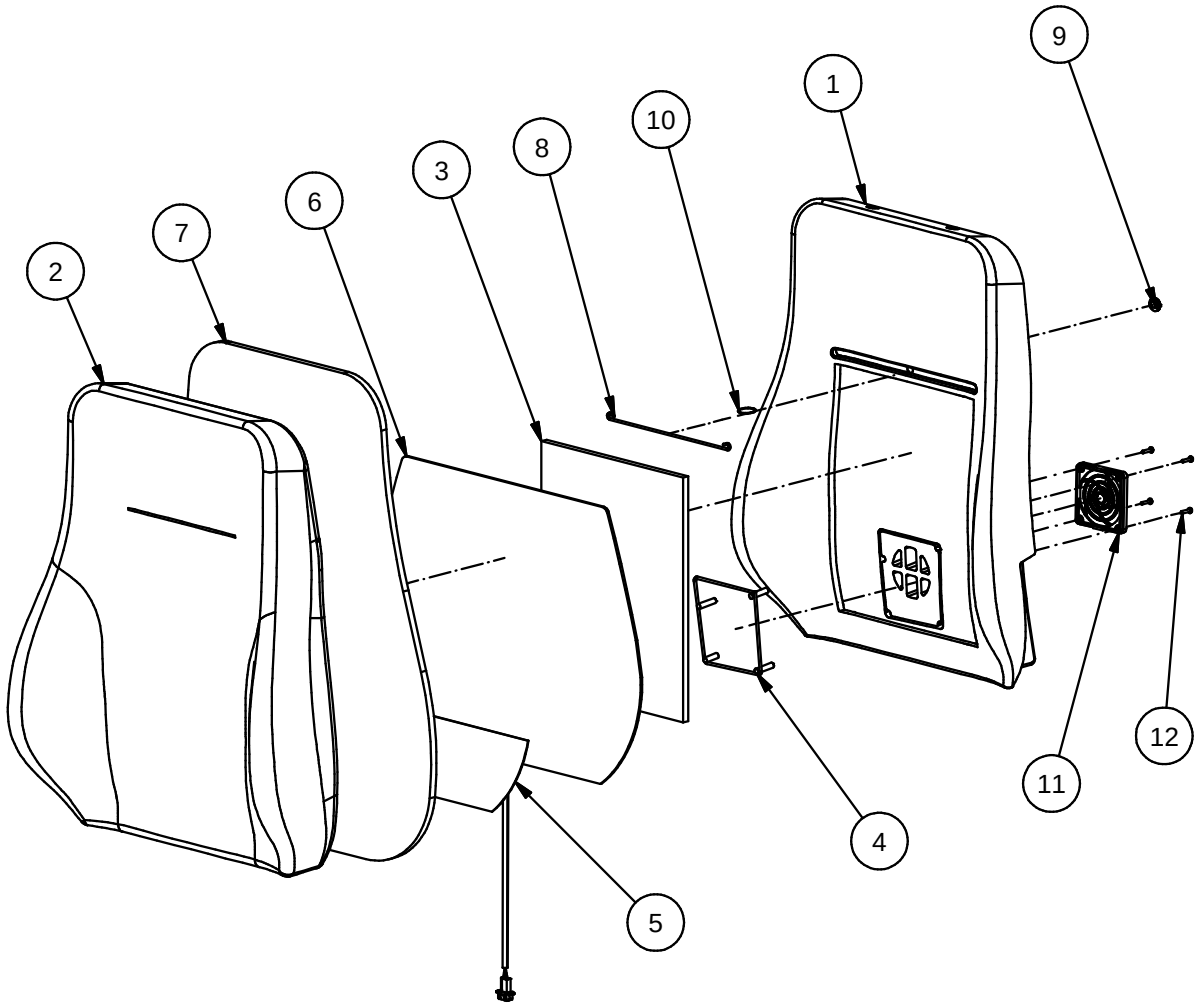

Fig.	Part. No.	Quantity	Description		
1	620454	1	FOAM BACKREST AIRVENT		
2	640466	1	TRIM BACKREST 640 AIR		CAMBORNE
3	628237	1	RUBBER HAIR MATT		
4	620447	1	FIXTURE WIRE CPL.		
5	640015	1	TRIM AIRVENT BACKREST		
6	500358	1	HEATING ELEMENT 24V		SQUAB
7	640017	1	POLYESTER WAD 10 MM BACK REST		
8	620140	1	BRACKET L=230		
9	660054	1	BUTTOM SPK		
10	660057	1	LOOPS 30 MM		
11	621140	1	FAN NET WITH HOLES		OEM ELECTRONICS AB ART. NO.: PF80
12	650018	4	SCREW RXS	ST3.5x19	DIN7981C-Z ZN-BL

Be-Ge Industri AB • Box 912 • S-572 29 Oskarshamn • Sweden • Phone +46(0)491761800 • Fax +46(0)49181900

BE - GE	Parts Replacements List **620900** **TRIM KIT BACKREST 640 BLUE 84 9000**	Doc. R1-620900 Date 121016 Rev. 0
	Valid from 930208 to	Rev.Date

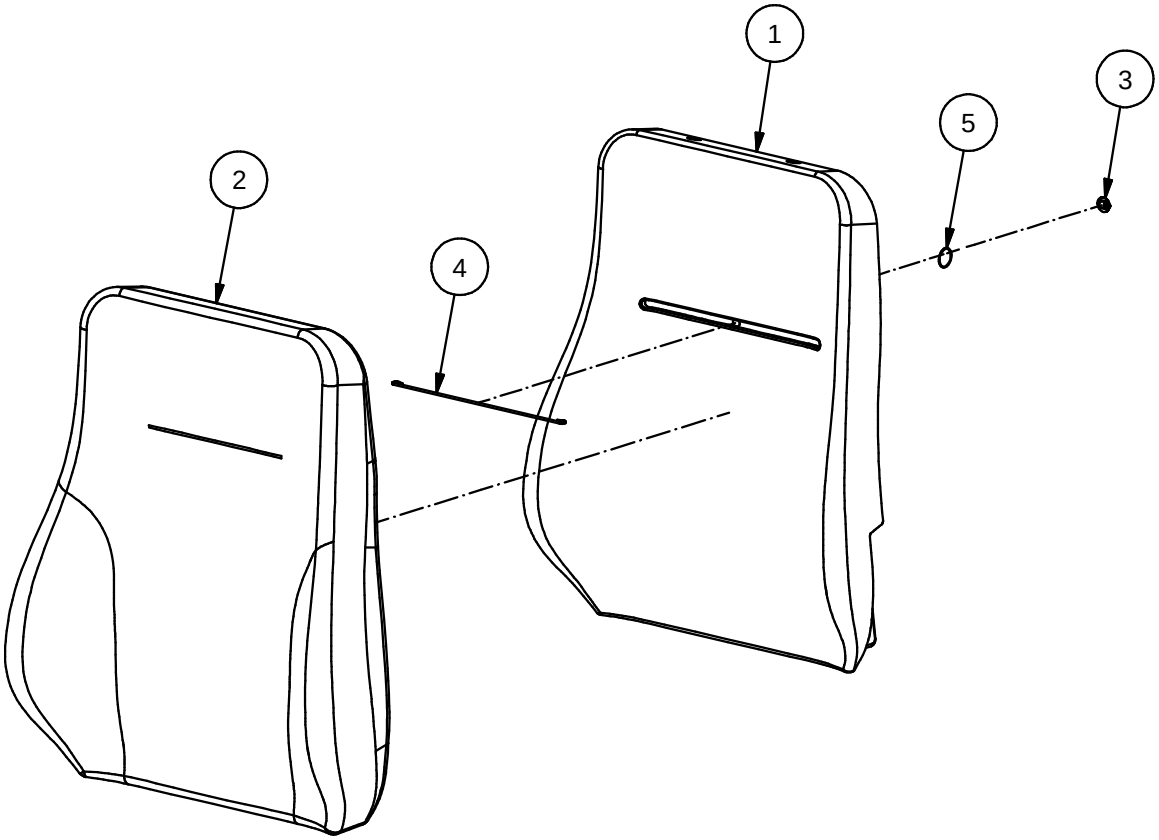

Fig.	Part. No.	Quantity	Description		
1	500191	1	FOAM BACKREST		
2	640312	1	TRIM BACKREST 640		PLUSH BLUE 84
3	660054	1	BUTTOM SPK		
4	620114	1	BRACKET L=260		
5	660057	1	LOOPS 30 MM		

Be-Ge Industri AB • Box 912 • S-572 29 Oskarshamn • Sweden • Phone +46(0)491761800 • Fax +46(0)49181900

BE - GE	Parts Replacements List **620920** **TRIM KIT BACKREST 640 RED 82 9000**	Doc. R1-620920 Date 121016 Rev. 0
	Valid from 930208 to	Rev.Date

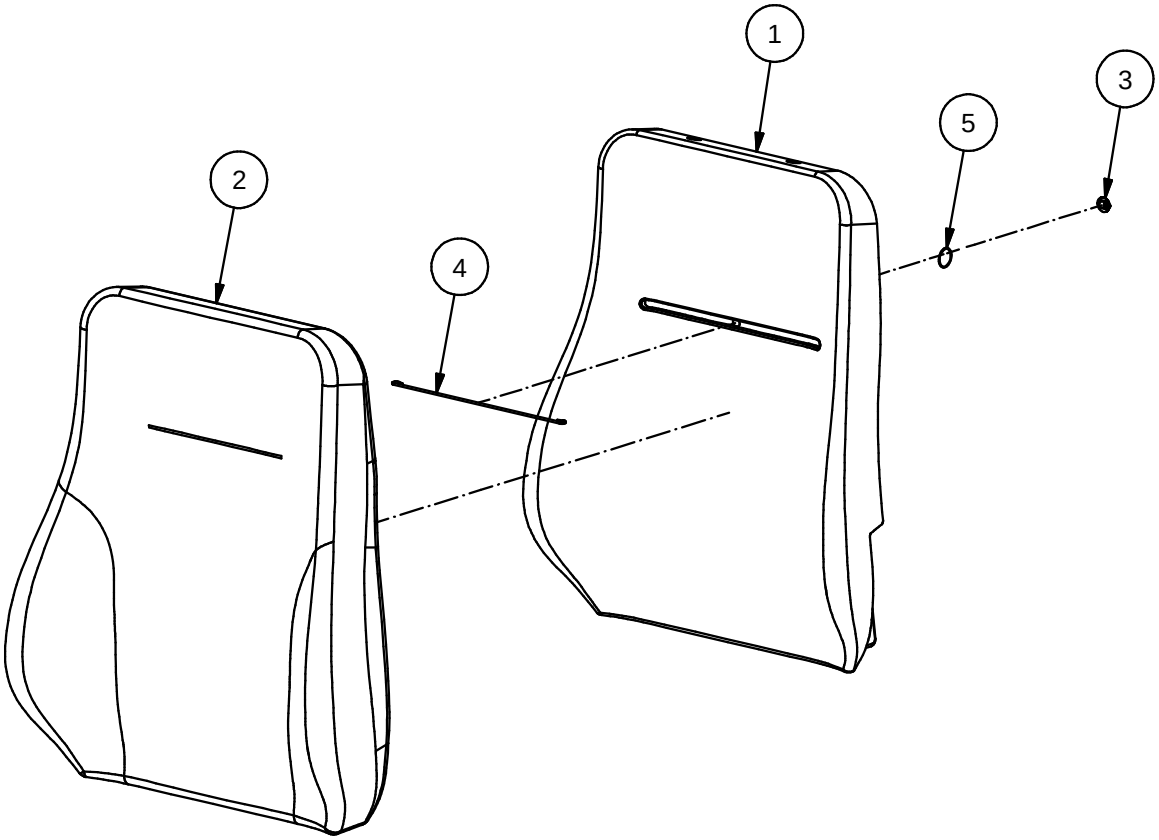

Fig.	Part. No.	Quantity	Description		
1	500191	1	FOAM BACKREST		
2	640272	1	TRIM BACKREST 640		PLUSH RED 82
3	660054	1	BUTTOM SPK		
4	620114	1	BRACKET L=260		
5	660057	1	LOOPS 30 MM		

Be-Ge Industri AB • Box 912 • S-572 29 Oskarshamn • Sweden • Phone +46(0)491761800 • Fax +46(0)49181900

BE - GE	Parts Replacements List **620940** **TRIM KIT BACKREST 640 GREY 89 9000**	Doc. R1-620940 Date 121016 Rev. 0
	Valid from 930208 to	Rev.Date

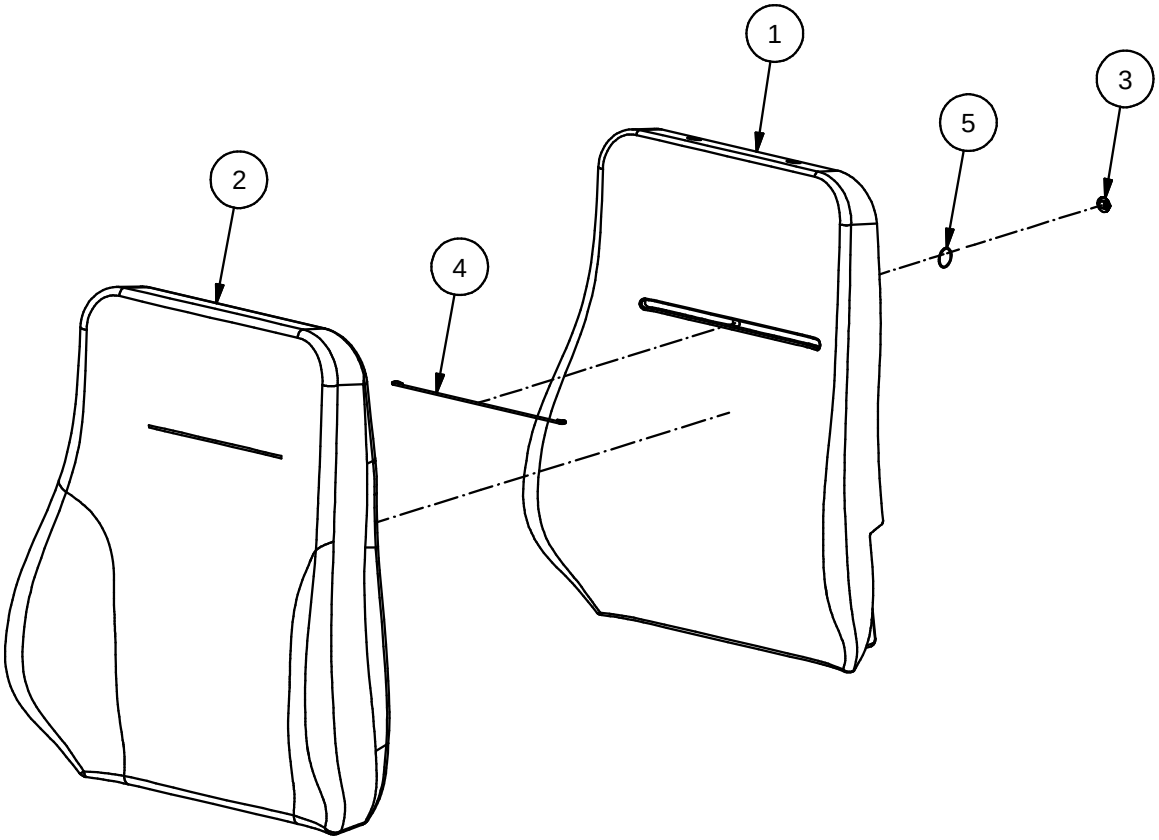

Fig.	Part. No.	Quantity	Description		
1	500191	1	FOAM BACKREST		
2	640332	1	TRIM BACKREST 640		PLUSH GREY 89
3	660054	1	BUTTOM SPK		
4	620114	1	BRACKET L=260		
5	660057	1	LOOPS 30 MM		

Be-Ge Industri AB • Box 912 • S-572 29 Oskarshamn • Sweden • Phone +46(0)491761800 • Fax +46(0)49181900

BE - GE	Parts Replacements List **620960** **TRIM KIT BACKREST 640 BLACK 83 9000**	Doc. R1-620960 Date 121016 Rev. 0
	Valid from 930208 to	Rev.Date

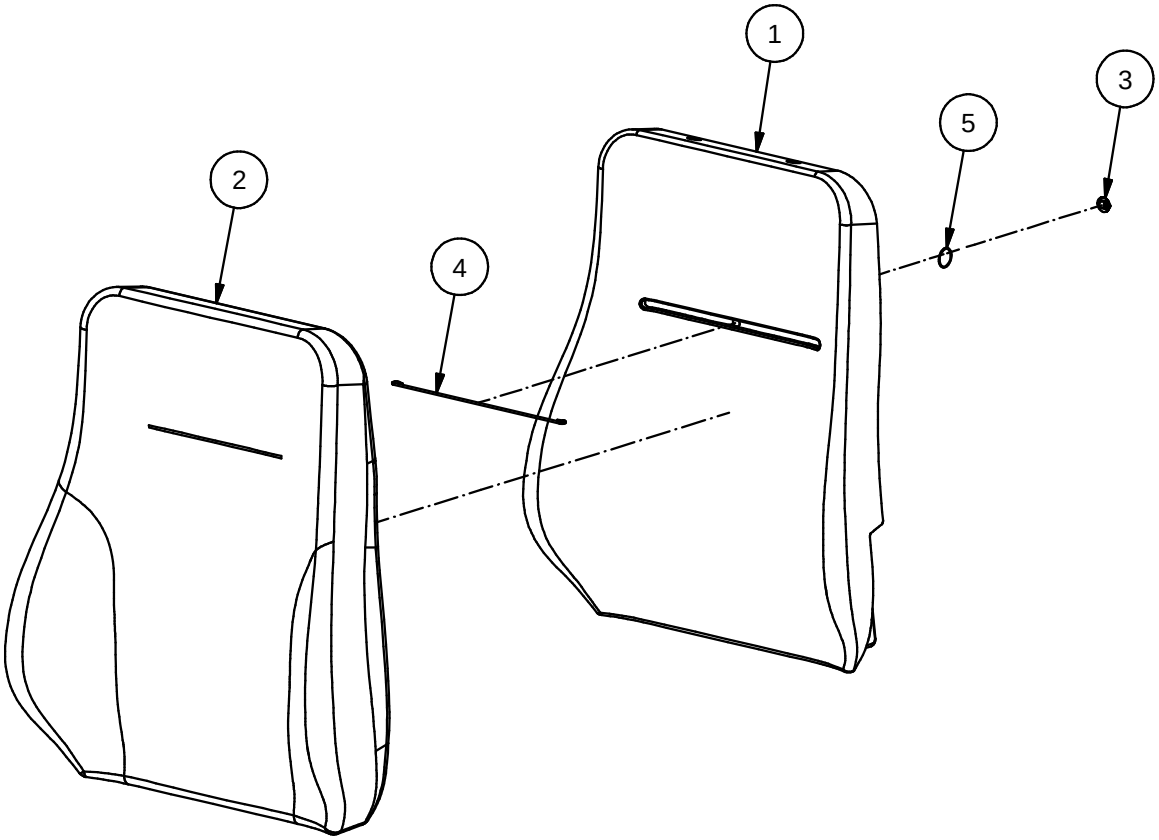

Fig.	Part. No.	Quantity	Description		
1	500191	1	FOAM BACKREST		
2	640292	1	TRIM BACKREST 640		PLUSH BLACK 83
3	660054	1	BUTTOM SPK		
4	620114	1	BRACKET L=260		
5	660057	1	LOOPS 30 MM		

Be-Ge Industri AB • Box 912 • S-572 29 Oskarshamn • Sweden • Phone +46(0)491761800 • Fax +46(0)49181900

BE-GE Establ. 1934	Parts Replacements List **600602** **HEAD REST NIGHTFALL** **9000**	Doc. R1-600602 Date 081124 Rev.
	Valid from 040501 to	Rev.Date

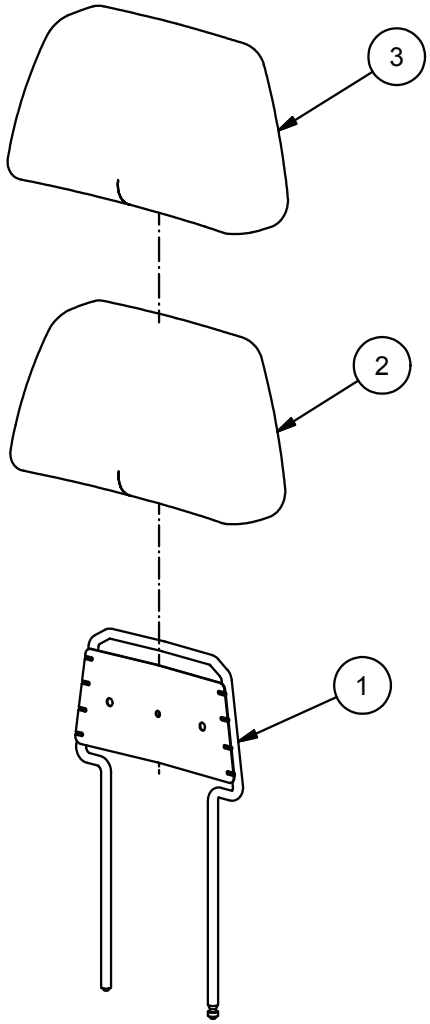

Fig.	Part. No.	Quantity	Description		
1	500341	1	FRAME 9000		
2	500344	1	FOAM HEAD REST		
3	641322	1	TRIM HEADREST		NIGHTFALL

Be-Ge Industri AB • Box 912 • S-572 29 Oskarshamn • Sweden • Phone +46(0)491761800 • Fax +46(0)49181900

BE - GE Establ. 1934	Parts Replacements List **600505** **HEADREST KIT ART. LEATEHR GREY 9000**	Doc. R1-600505 Date 120508 Rev. 0
	Valid from 921126 to	Rev.Date

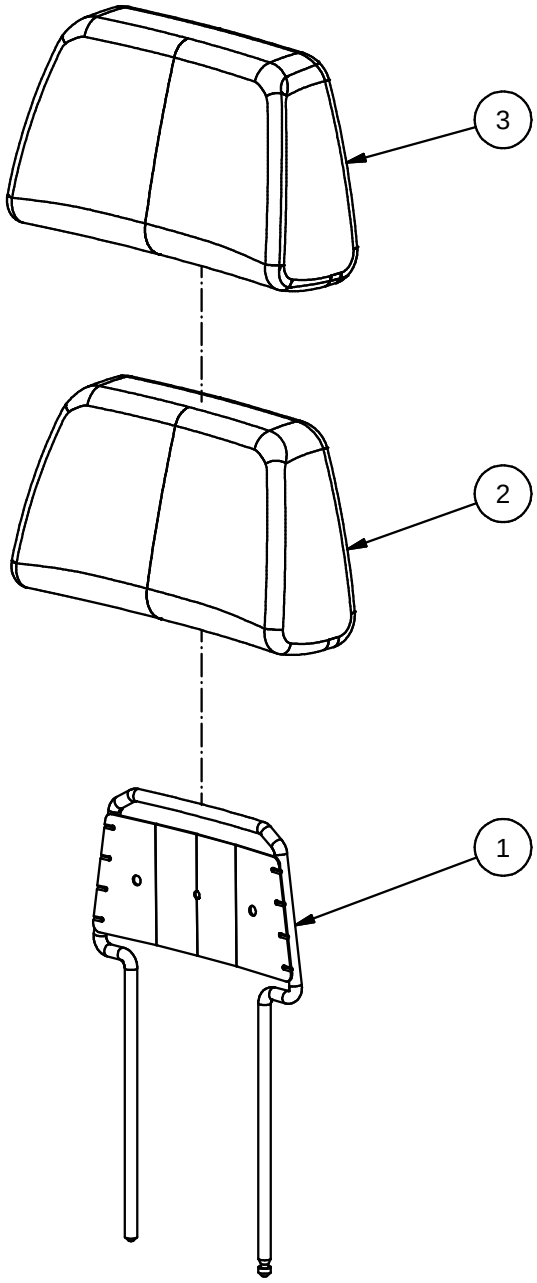

Fig.	Part. No.	Quantity	Description		
1	500341	1	FRAME HEADREST		
2	500344	1	FOAM HEAD REST		
3	500950	1	TRIM HEADREST		ART. LEATHER GREY

Be-Ge Industri AB • Box 912 • S-572 29 Oskarshamn • Sweden • Phone +46(0)491761800 • Fax +46(0)49181900

BE - GE
Establ. 1934

Parts Replacements List

600506

HEADREST KIT LEATHER GREY

9000

Valid from 900807 to

Doc.	R1-600506
Date	120611
Rev.	0
Rev.Date	

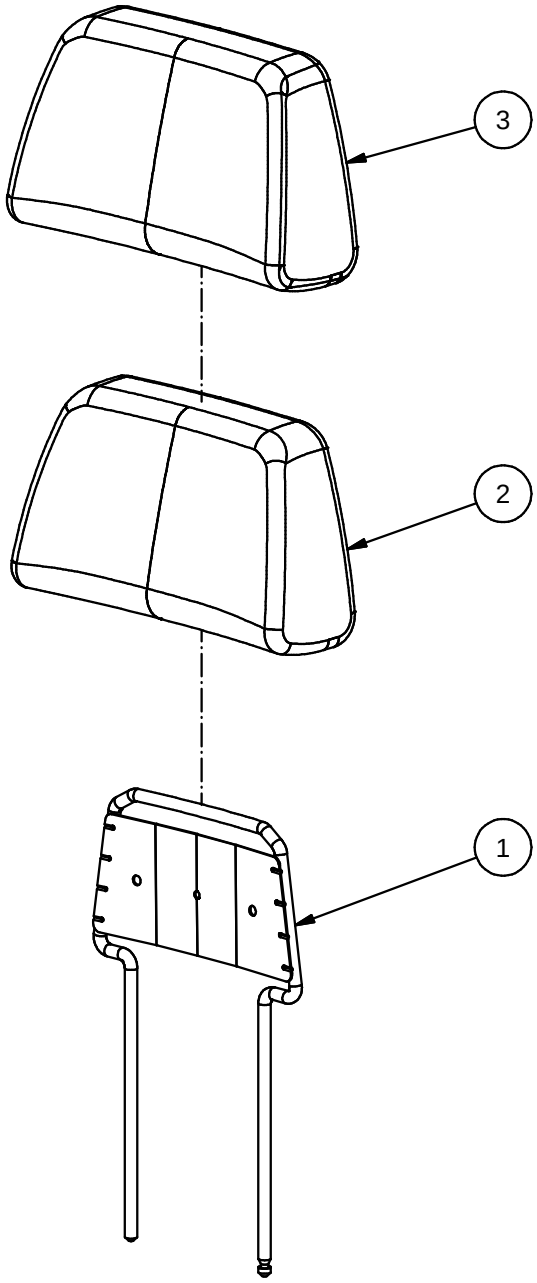

Fig.	Part. No.	Quantity	Description		
1	500341	1	FRAME HEADREST		
2	500344	1	FOAM HEAD REST		
3	500626	1	TRIM HEADREST		LEATHER GREY BALTIQUE

Be-Ge Industri AB • Box 912 • S-572 29 Oskarshamn • Sweden • Phone +46(0)491761800 • Fax +46(0)49181900

BE-GE Establ. 1934	Parts Replacements List **600514** **HEAD REST AIRVENT** **9000**	Doc. R1-600514 Date 120613 Rev. 0
	Valid from 960409 to	Rev.Date

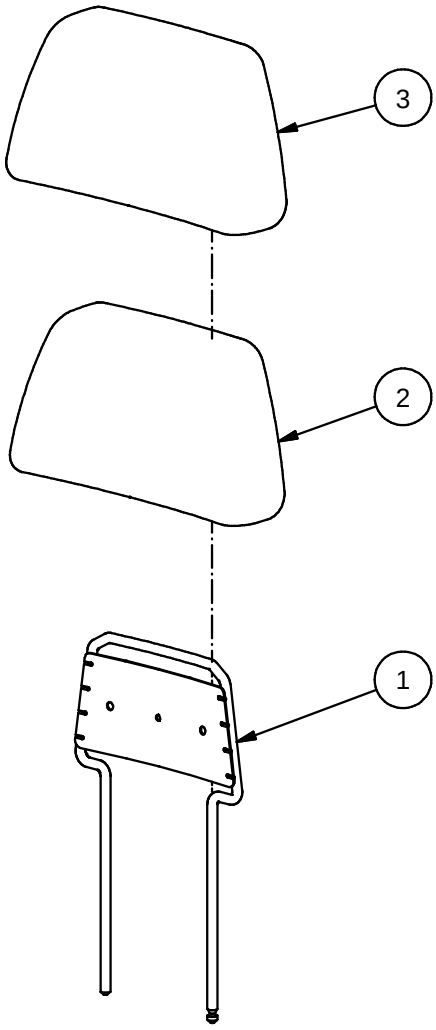

Fig.	Part. No.	Quantity	Description		
1	500341	1	FRAME HEADREST		
2	500344	1	FOAM HEAD REST		
3	640465	1	TRIM HEADREST		CAMBORNE BLACK

Be-Ge Industri AB • Box 912 • S-572 29 Oskarshamn • Sweden • Phone +46(0)491761800 • Fax +46(0)49181900

BE - GE Establ. 1934	Parts Replacements List **600520** **HEADREST KIT PLUSH BLUE 84** **9000**	Doc. R1-600520 Date 120508 Rev. 0
	Valid from 921126 to	Rev.Date

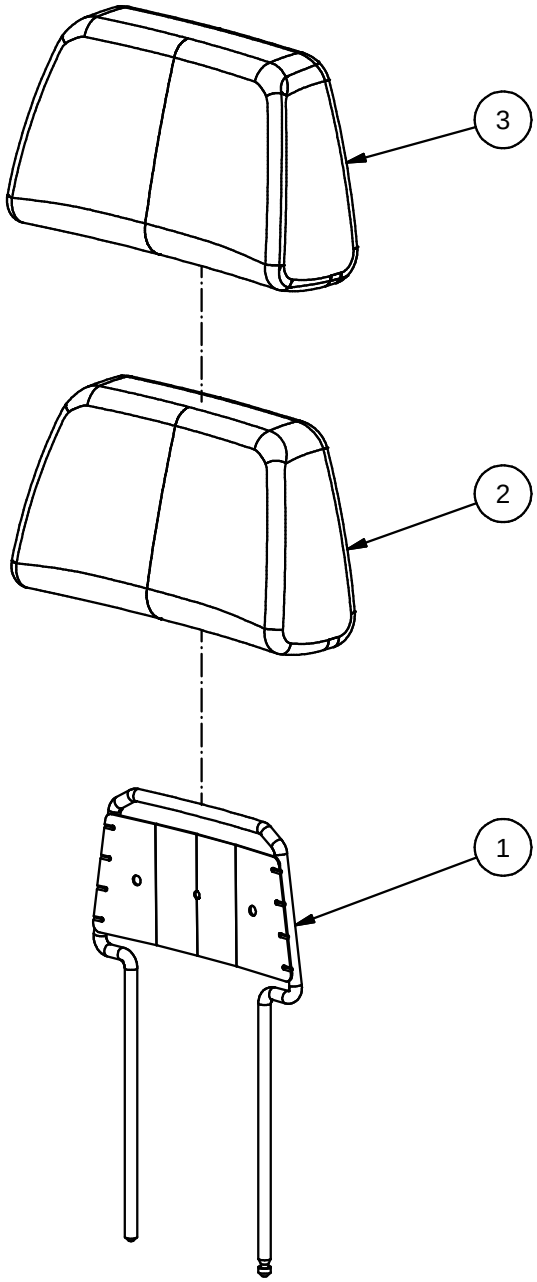

Fig.	Part. No.	Quantity	Description		
1	500341	1	FRAME HEADREST		
2	500344	1	FOAM HEAD REST		
3	640311	1	TRIM HEADREST		PLUSH BLUE 84

Be-Ge Industri AB • Box 912 • S-572 29 Oskarshamn • Sweden • Phone +46(0)491761800 • Fax +46(0)49181900

BE - GE
Establ. 1934

Parts Replacements List

600521

HEADREST KIT PLUSH RED 82
9000

Valid from 921126 to

Doc. R1-600521
Date 120611
Rev. 0
Rev.Date

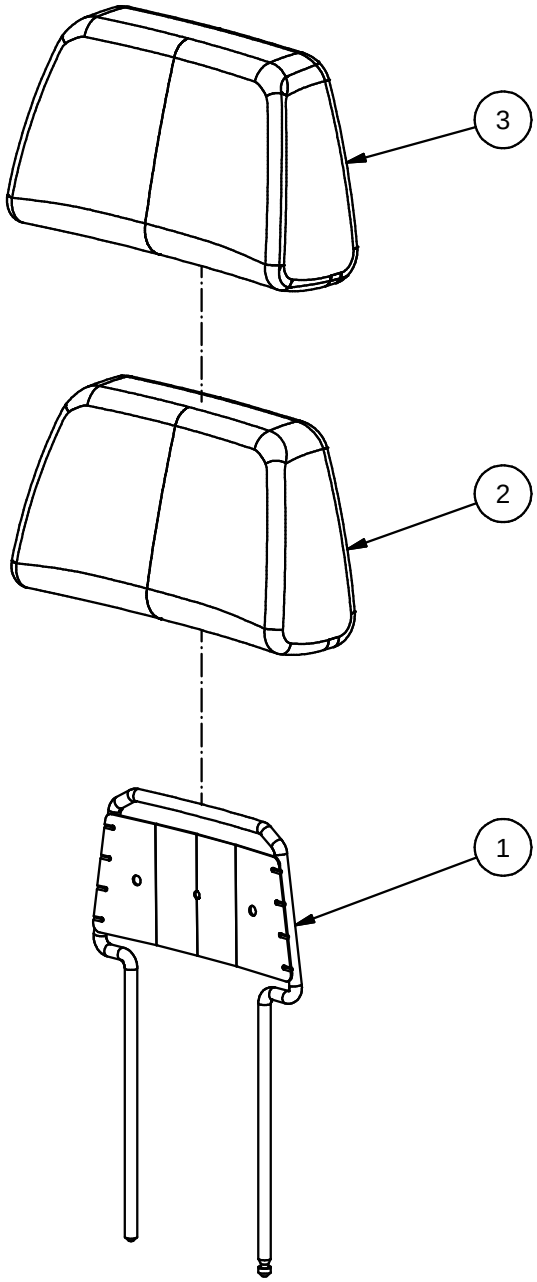

Fig.	Part. No.	Quantity	Description		
1	500341	1	FRAME HEADREST		
2	500344	1	FOAM HEAD REST		
3	640271	1	TRIM HEADREST		PLUSH RED 82

Be-Ge Industri AB • Box 912 • S-572 29 Oskarshamn • Sweden • Phone +46(0)491761800 • Fax +46(0)49181900

BE - GE Establ. 1934	Parts Replacements List **600523** **HEADREST KIT PLUSH GREY 89 9000**	Doc. R1-600523 Date 120508 Rev. 0
	Valid from 921126 to	Rev.Date

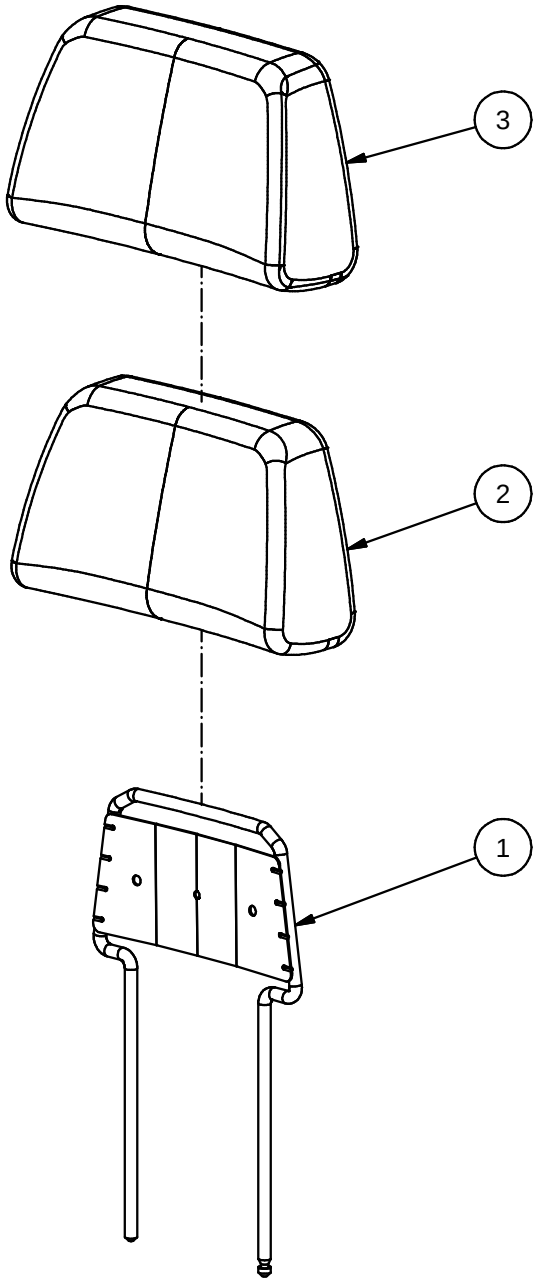

Fig.	Part. No.	Quantity	Description		
1	500341	1	FRAME HEADREST		
2	500344	1	FOAM HEAD REST		
3	640331	1	TRIM HEADREST		PLUSH GREY 89

Be-Ge Industri AB • Box 912 • S-572 29 Oskarshamn • Sweden • Phone +46(0)491761800 • Fax +46(0)49181900

BE - GE
Establ. 1934

Parts Replacements List

600524

HEADREST KIT PLUSH BLACK 83
9000

Valid from 921126 to

Doc.	R1-600524
Date	120508
Rev.	0
Rev.Date	

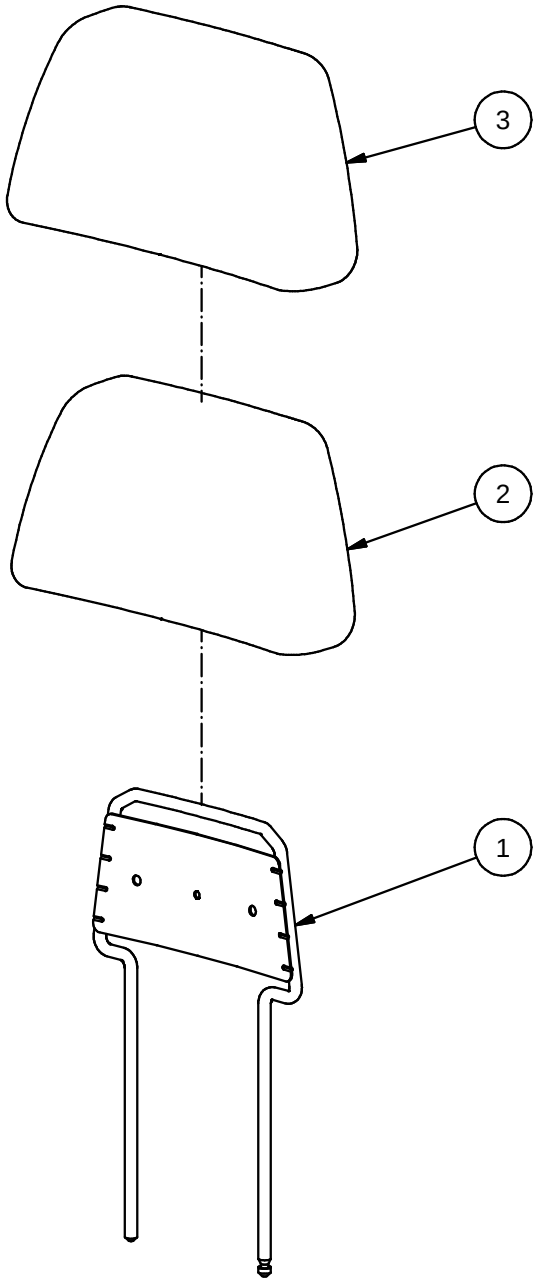

Fig.	Part. No.	Quantity	Description		
1	500341	1	FRAME HEADREST		
2	500344	1	FOAM HEAD REST		
3	640291	1	TRIM HEADREST		PLUSH BLACK 83

Be-Ge Industri AB • Box 912 • S-572 29 Oskarshamn • Sweden • Phone +46(0)491761800 • Fax +46(0)49181900

BE - GE	Parts Replacements List **600603** **HEADREST KIT NIGHTFALL 4-WAY** **9000**	Doc. R1-600603 Date 120508 Rev. 0
	Valid from 040506 to	Rev.Date

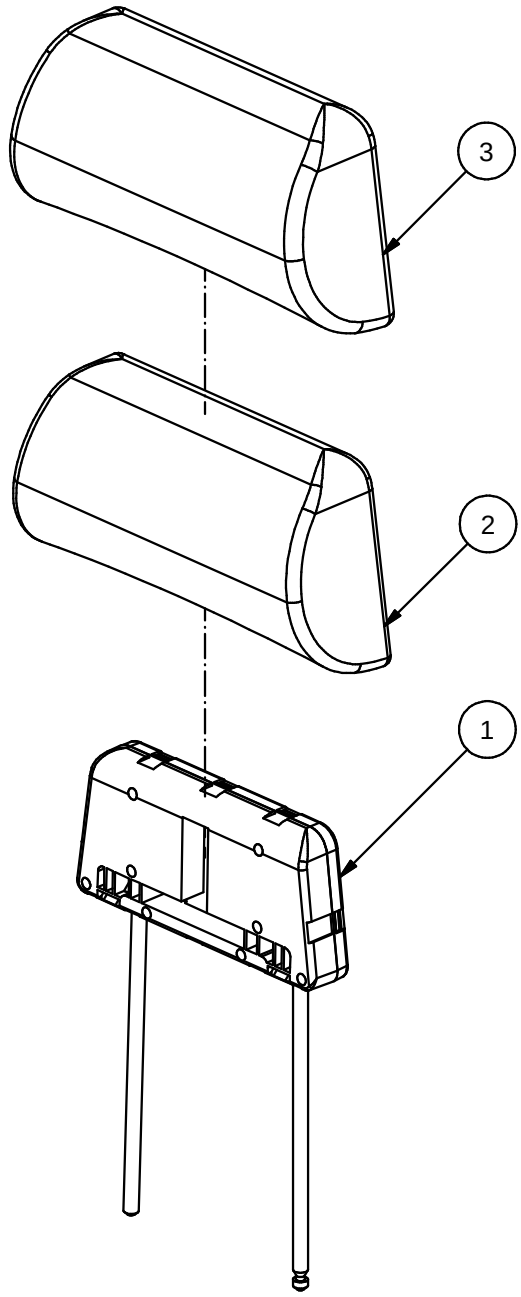

Fig.	Part. No.	Quantity	Description		
2	621513	1	HEAD REST FOAM 4-WAYS		
1	621567	1	HEAD REST FRAMEWORK ASM		
3	641023	1	TRIM HEAD REST 4-WAYS, NIGHTFALL		

Be-Ge Industri AB • Box 912 • S-572 29 Oskarshamn • Sweden • Phone +46(0)491761800 • Fax +46(0)49181900

BE - GE	Parts Replacements List **600532** **HEADREST KIT LEATHER BLACK** **9000**	Doc. R1-600532 Date 120611 Rev. 0
	Valid from 010910 to	Rev.Date

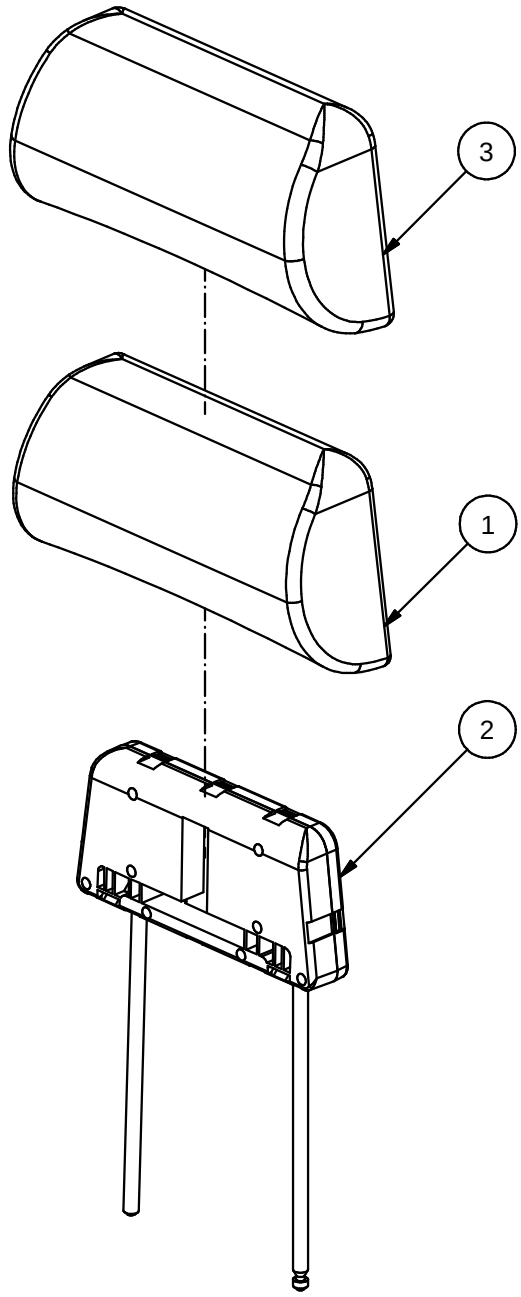

Fig.	Part. No.	Quantity	Description		
1	621513	1	HEAD REST FOAM 4-WAYS		
2	621567	1	HEAD REST FRAMEWORK ASM		
3	640478	1	TRIM HEAD REST 4-WAYS		LEATHER BLACK

Be-Ge Industri AB • Box 912 • S-572 29 Oskarshamn • Sweden • Phone +46(0)491761800 • Fax +46(0)49181900

BE - GE	Parts Replacements List **600530** **HEADREST KIT PLUSH BLACK 83 4-WAY** **9000**	Doc. R1-600530 Date 120601 Rev. 0
	Valid from 010910 to	Rev.Date

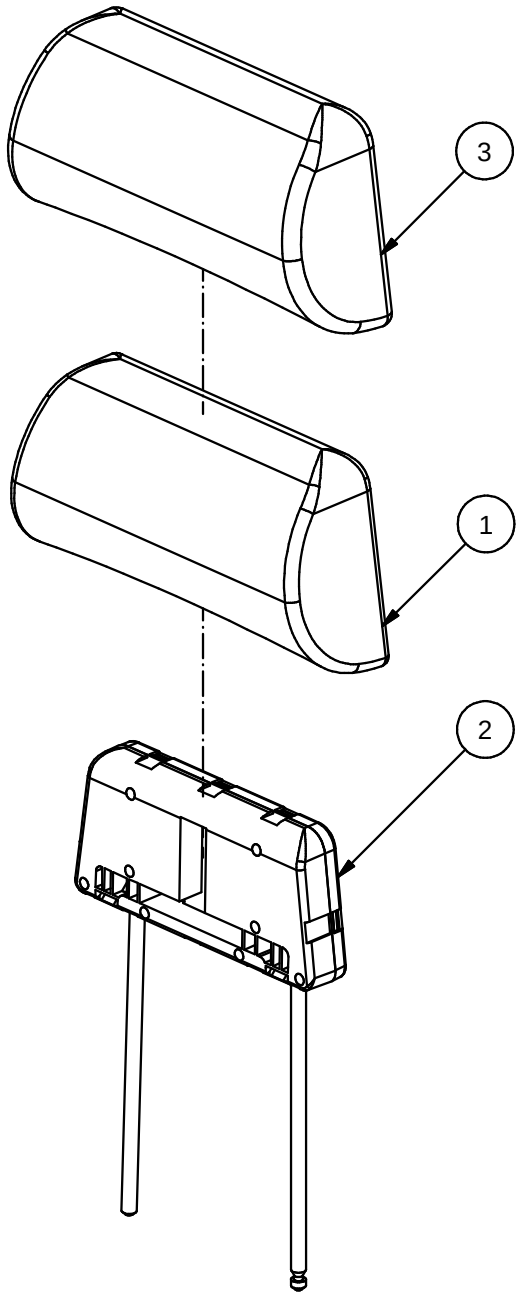

Fig.	Part. No.	Quantity	Description		
1	621513	1	HEAD REST FOAM 4-WAYS		
2	621567	1	HEAD REST FRAMEWORK ASM		
3	640290	1	TRIM HEAD REST 4-WAYS		PLUSH BLACK 83

Be-Ge Industri AB • Box 912 • S-572 29 Oskarshamn • Sweden • Phone +46(0)491761800 • Fax +46(0)49181900

BE - GE	Parts Replacements List **600240** **AIRVENT TYPE 2 12V** **9000**	Doc. R1-600240 Date 121016 Rev. 1
	Valid from 960313 to	Rev.Date 130408

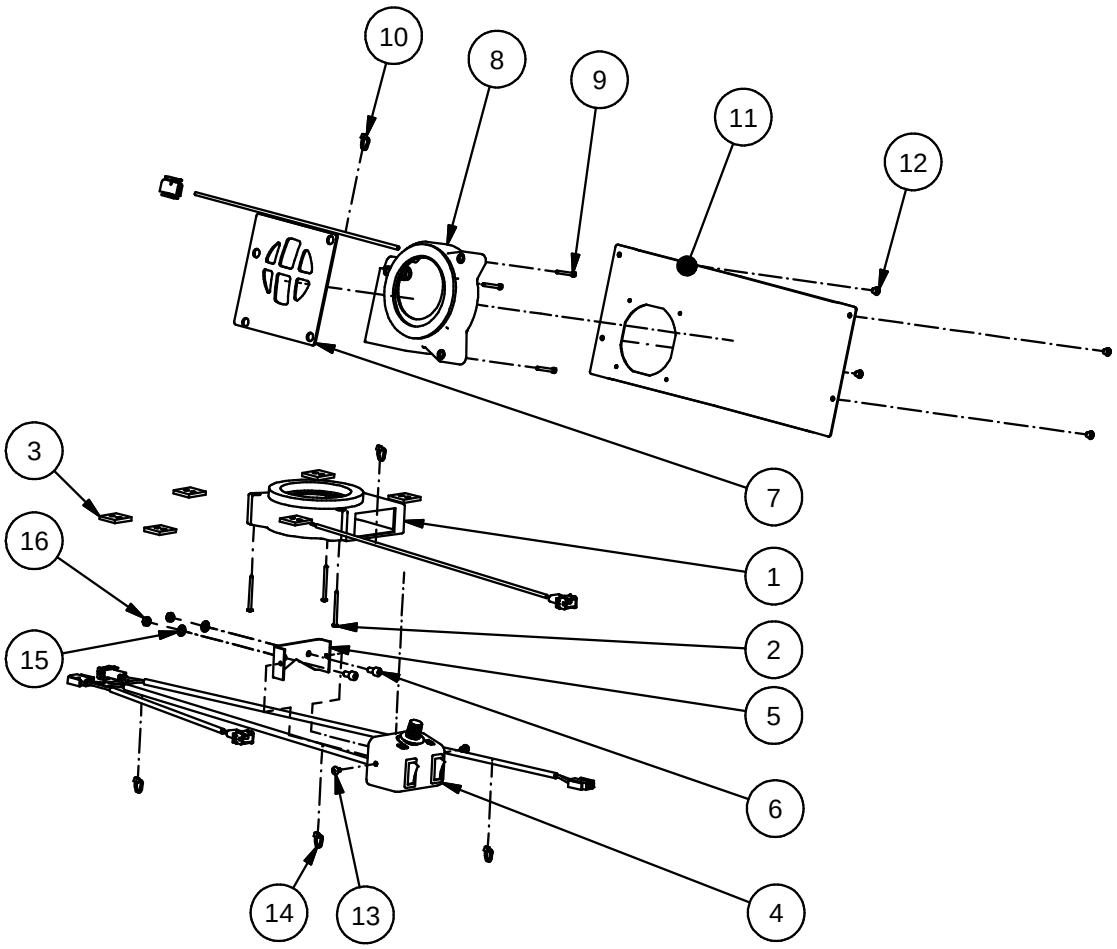

Fig.	Part. No.	Quantity	Description		
1	621121	1	FAN 12V SEAT AIRVENT TYPE 2		
2	650063	3	SCREW RXS	ST2.9x38	DIN7981C ZN POZ
3	501120	6	FOAM RUBBER		
4	628032	1	CONTROL AIRVENT TYPE 2		
5	620441	1	BRACKET		
6	650062	2	SCREW MC6S	M5x10	ISO4762 ZN 8.8
7	620450	1	FAN PROTECTING PLATE		
8	621122	1	FAN 12V BACKREST AIRVENT TYPE 2		
9	650061	3	SCREW ECS	M3x25	DIN84 ZN 4.8
10	660109	1	CABLE TIE		
11	620458	1	PLATE BACKREST 640 STD		
12	653000	4	RIVET AL/ST	4.0x7	AP/D BS
13	650037	2	SCREW MRX-TT	M4x6	DIN7500C-Z ZN BLACK
14	500317	4	CABLE TIE	200x4.6	WHITE
15	500495	2	WASHER IZ	6.4x11x0.7	DIN6798 ZN
16	500496	2	NUT M6M	M5	DIN934 ZN K8

Be-Ge Industri AB • Box 912 • S-572 29 Oskarshamn • Sweden • Phone +46(0)491761800 • Fax +46(0)49181900

BE - GE	Parts Replacements List **600242** **AIRVENT TYPE 2 24V** **9000**	Doc. R1-600242 Date 121016 Rev. 1
	Valid from 960313 to	Rev.Date 130408

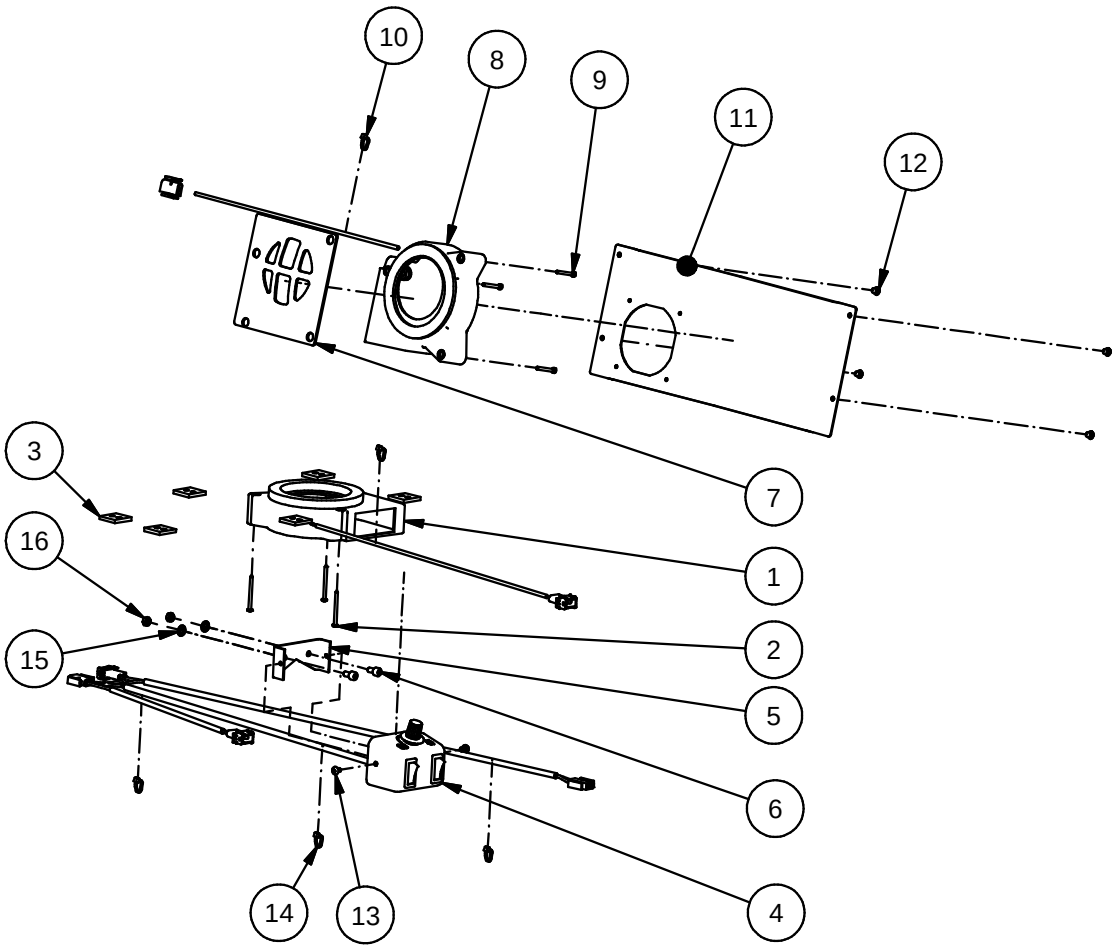

Fig.	Part. No.	Quantity	Description		
1	621123	1	FAN 24V SEAT AIRVENT TYPE 2		
2	650063	3	SCREW RXS	ST2.9x38	DIN7981C ZN POZ
3	501120	6	FOAM RUBBER		
4	628032	1	CONTROL AIRVENT TYPE 2		
5	620441	1	BRACKET		
6	650062	2	SCREW MC6S	M5x10	ISO4762 ZN 8.8
7	620450	1	FAN PROTECTING PLATE		
8	621124	1	FAN 24V BACKREST AIRVENT TYPE 2		
9	650061	3	SCREW ECS	M3x25	DIN84 ZN 4.8
10	660109	1	CABLE TIE		
11	620458	1	PLATE BACKREST 640 STD		
12	653000	4	RIVET AL/ST	4.0x7	AP/D BS
13	650037	2	SCREW MRX-TT	M4x6	DIN7500C-Z ZN BLACK
14	500317	4	CABLE TIE	200x4.6	WHITE
15	500495	2	WASHER IZ	6.4x11x0.7	DIN6798 ZN
16	500496	2	NUT M6M	M5	DIN934 ZN K8

Be-Ge Industri AB • Box 912 • S-572 29 Oskarshamn • Sweden • Phone +46(0)491761800 • Fax +46(0)49181900

BE-GE	Parts Replacements List **501090** **HEATING ELEMENT 12V** **9000**	Doc. R1-501090 Date 120208 Rev. 0
	Valid from 021031 to	Rev.Date

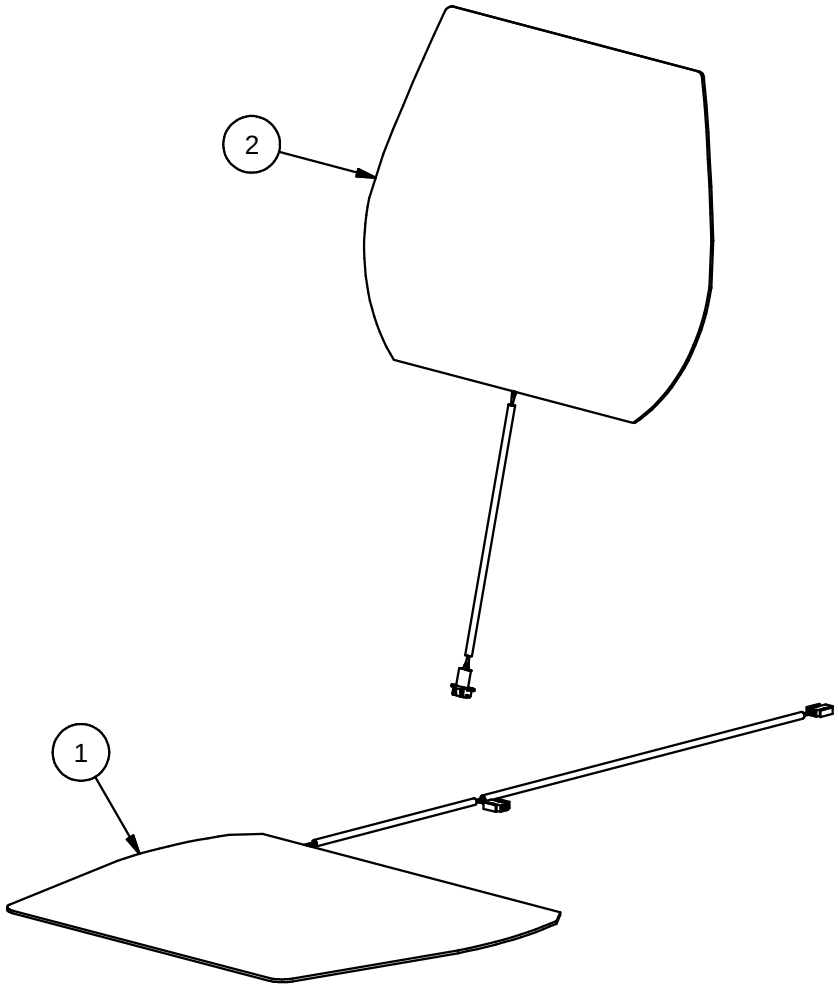

Fig.	Part. No.	Quantity	Description		
1	500349	1	HEATING ELEMENT 12V		CUSHION
2	500350	1	HEATING ELEMENT 12V		SQUAB

Be-Ge Industri AB • Box 912 • S-572 29 Oskarshamn • Sweden • Phone +46(0)491761800 • Fax +46(0)49181900

BE-GE	Parts Replacements List **501091** **HEATING ELEMENT 24V** **9000**	Doc. R1-501091 Date 100914 Rev. 0
	Valid from 880502 to	Rev.Date

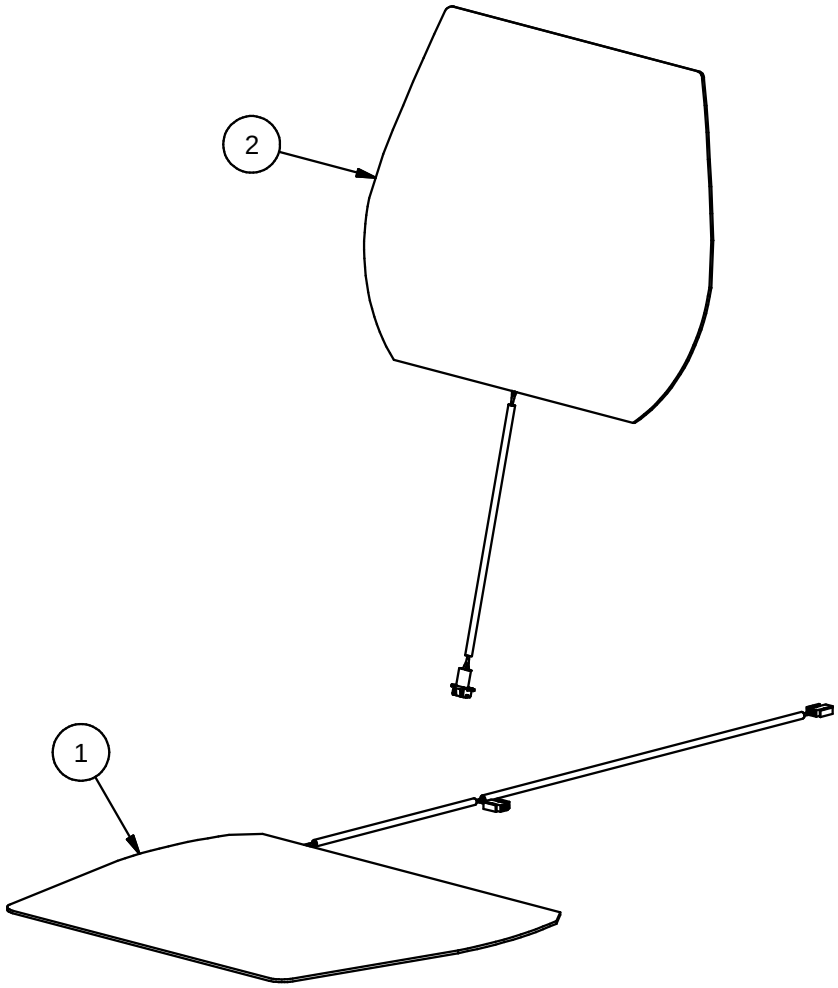

Fig.	Part. No.	Quantity	Description		
1	500357	1	HEATING ELEMENT 24V		CUSHION
2	500358	1	HEATING ELEMENT 24V		SQUAB

Be-Ge Industri AB • Box 912 • S-572 29 Oskarshamn • Sweden • Phone +46(0)491761800 • Fax +46(0)49181900

BE-GE	Parts Replacements List **603038** **HEATING ELEMENT 24V LEATHER** **9000**	Doc. R1-603038 Date 120614 Rev. 0
	Valid from 920811 to	Rev.Date

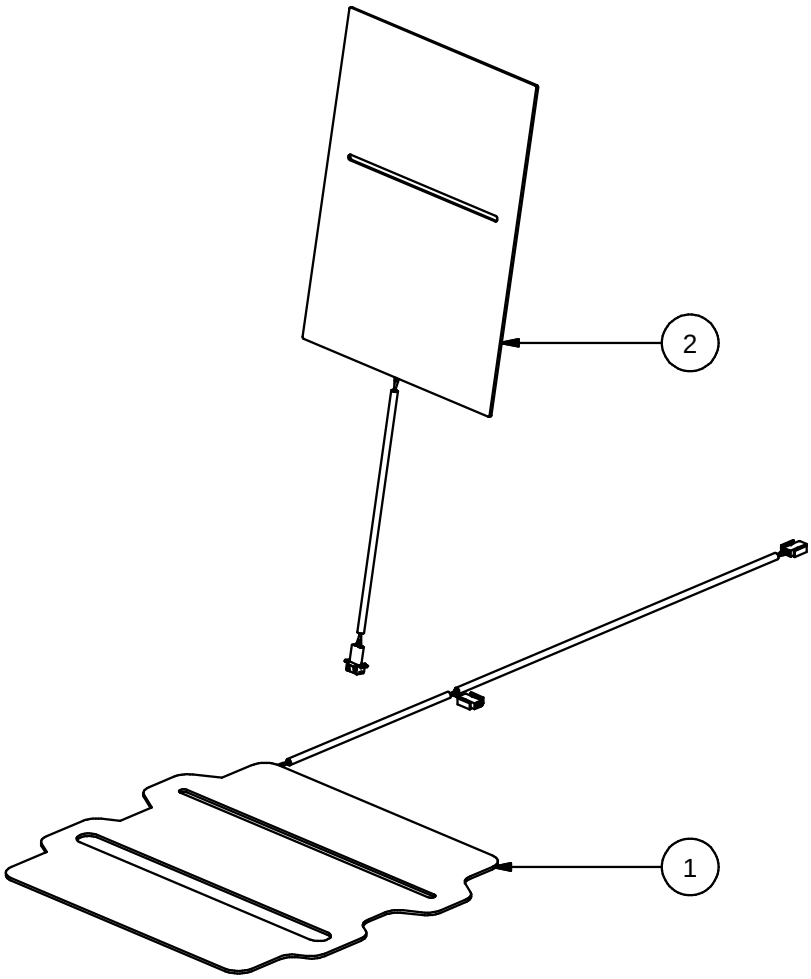

Fig.	Part. No.	Quantity	Description		
1	500567	1	HEATING ELEMENT 24V		CUSHION
2	500568	1	HEATING ELEMENT 24V		SQUAB

Be-Ge Industri AB • Box 912 • S-572 29 Oskarshamn • Sweden • Phone +46(0)491761800 • Fax +46(0)49181900

BE - GE	Parts Replacements List **603124** **MICRO SWITCH IP40** **9000**	Doc. R1-603124 Date 120507 Rev. 0
	Valid from 070611 to	Rev.Date

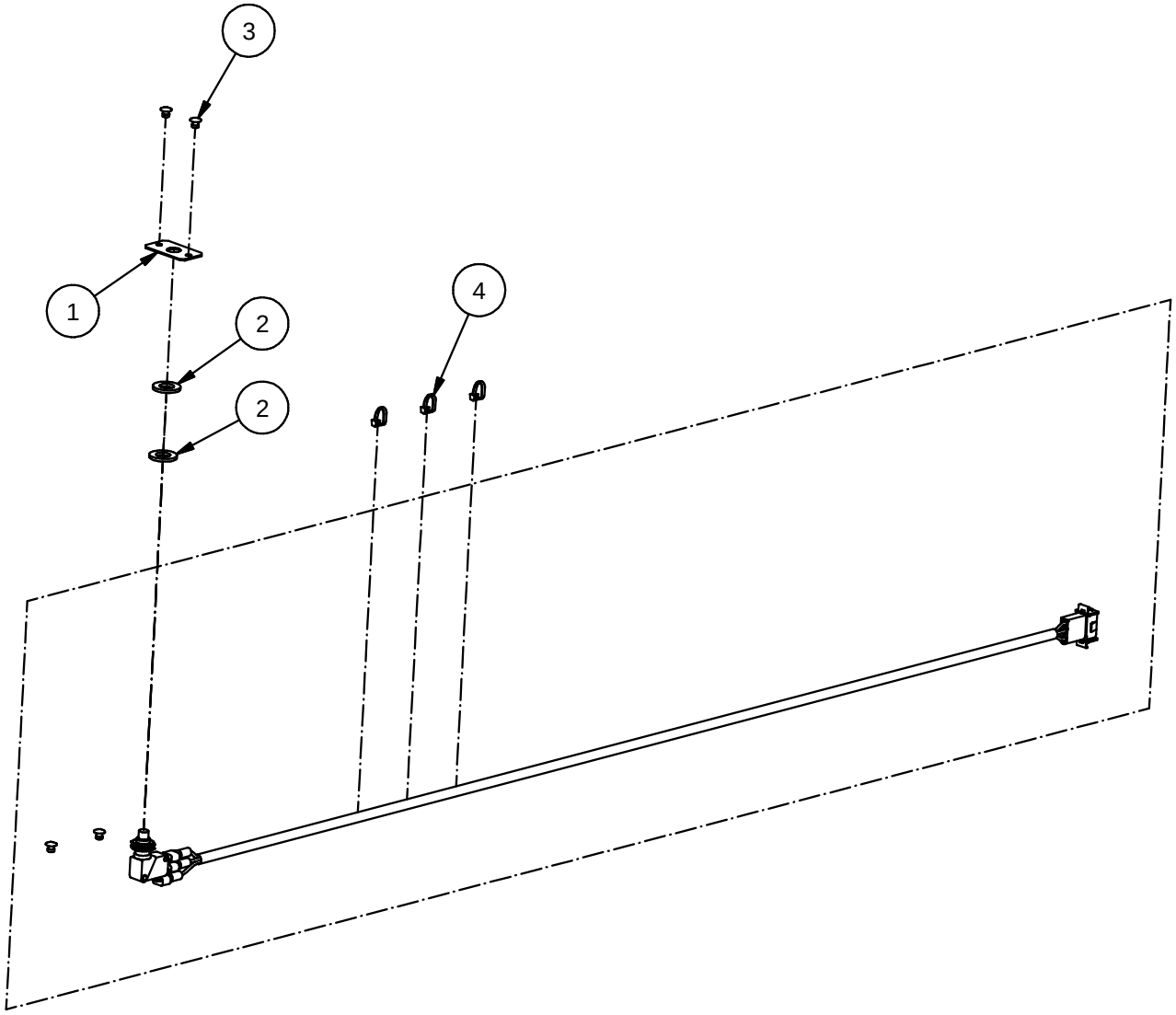

Fig.	Part. No.	Quantity	Description		
1	628684	1	BRACKET MICROSWITCH		
2	561027	2	WASHER	10.5x20x2	
3	653000	4	RIVET AL/ST	4.0x7	AP/D BS
4	500317	3	CABLE TIE	200x4.6	WHITE
5	629342	1	MICROSWITCH IP40		

Be-Ge Industri AB • Box 912 • S-572 29 Oskarshamn • Sweden • Phone +46(0)491761800 • Fax +46(0)49181900

BE - GE	Parts Replacements List **603125** **MICRO SWITCH IP40 + BUZZER 12V** **9000**	Doc. R1-603125 Date 120507 Rev. 0
	Valid from 070611 to	Rev.Date

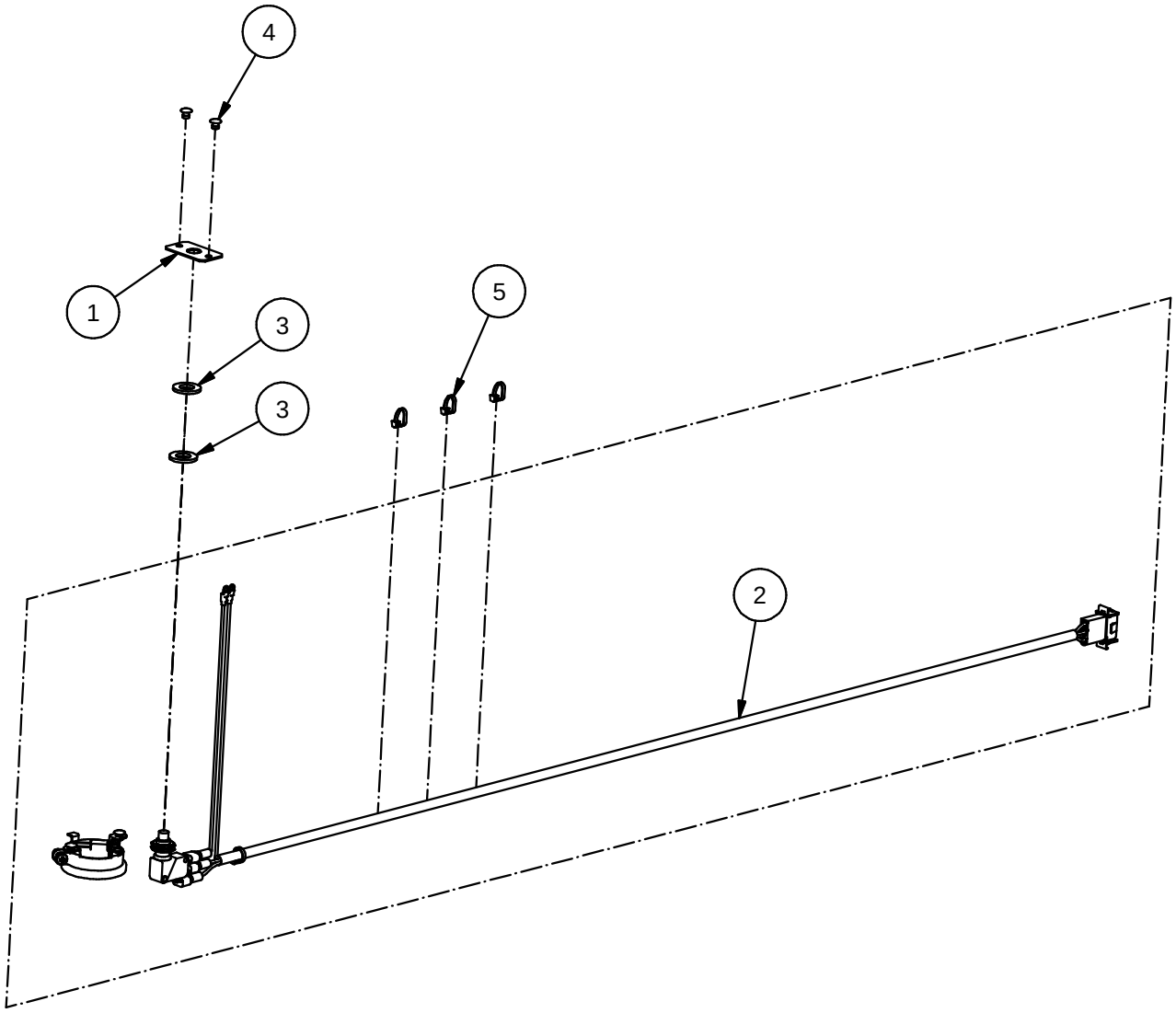

Fig.	Part. No.	Quantity	Description		
1	628684	1	BRACKET MICROSWITCH		
2	629348	1	MICRO SWITCH IP40 + BUZZER 12V		
3	561027	2	WASHER	10.5x20x2	
4	653000	4	RIVET AL/ST	4.0x7	AP/D BS
5	500317	3	CABLE TIE	200x4.6	WHITE

Be-Ge Industri AB • Box 912 • S-572 29 Oskarshamn • Sweden • Phone +46(0)491761800 • Fax +46(0)49181900

BE - GE	Parts Replacements List **603126** **MICRO SWITCH IP40+BUZZER 24V** **9000**	Doc. R1-603126 Date 110428 Rev. 0
	Valid from 070611 to	Rev.Date

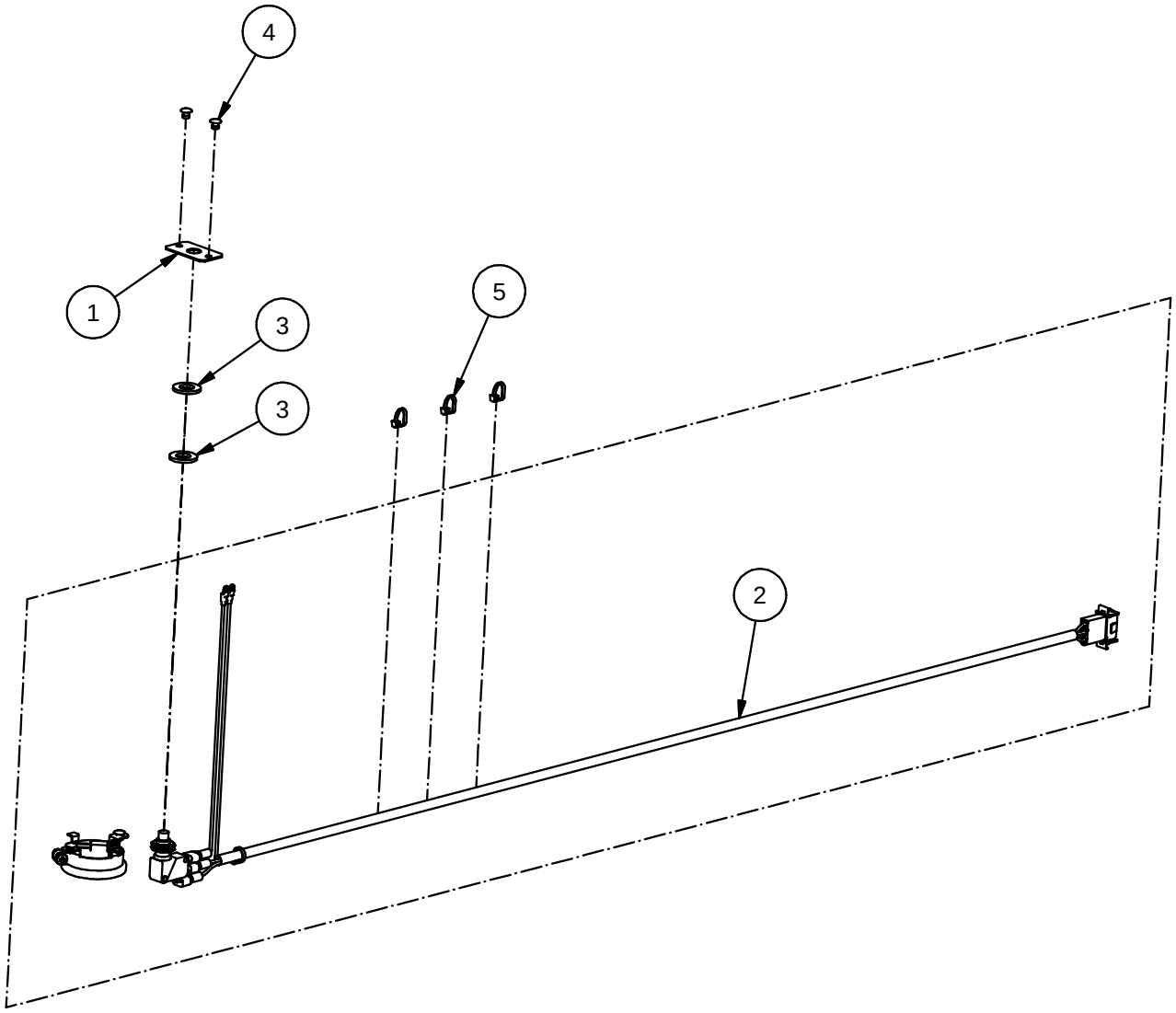

Fig.	Part. No.	Quantity	Description		
1	628684	1	BRACKET MICROSWITCH		
2	629349	1	MICRO SWITCH IP40		
3	561027	2	WASHER	10.5x20x2	
4	653000	4	RIVET AL/ST	4.0x7	AP/D BS
5	500317	3	CABLE TIE	200x4.6	WHITE

Be-Ge Industri AB • Box 912 • S-572 29 Oskarshamn • Sweden • Phone +46(0)491761800 • Fax +46(0)49181900

BE - GE	Parts Replacements List **603127** **MICRO SWITCH IP57** **9000**	Doc. R1-603127 Date 120504 Rev. 0
	Valid from 070611 to	Rev.Date

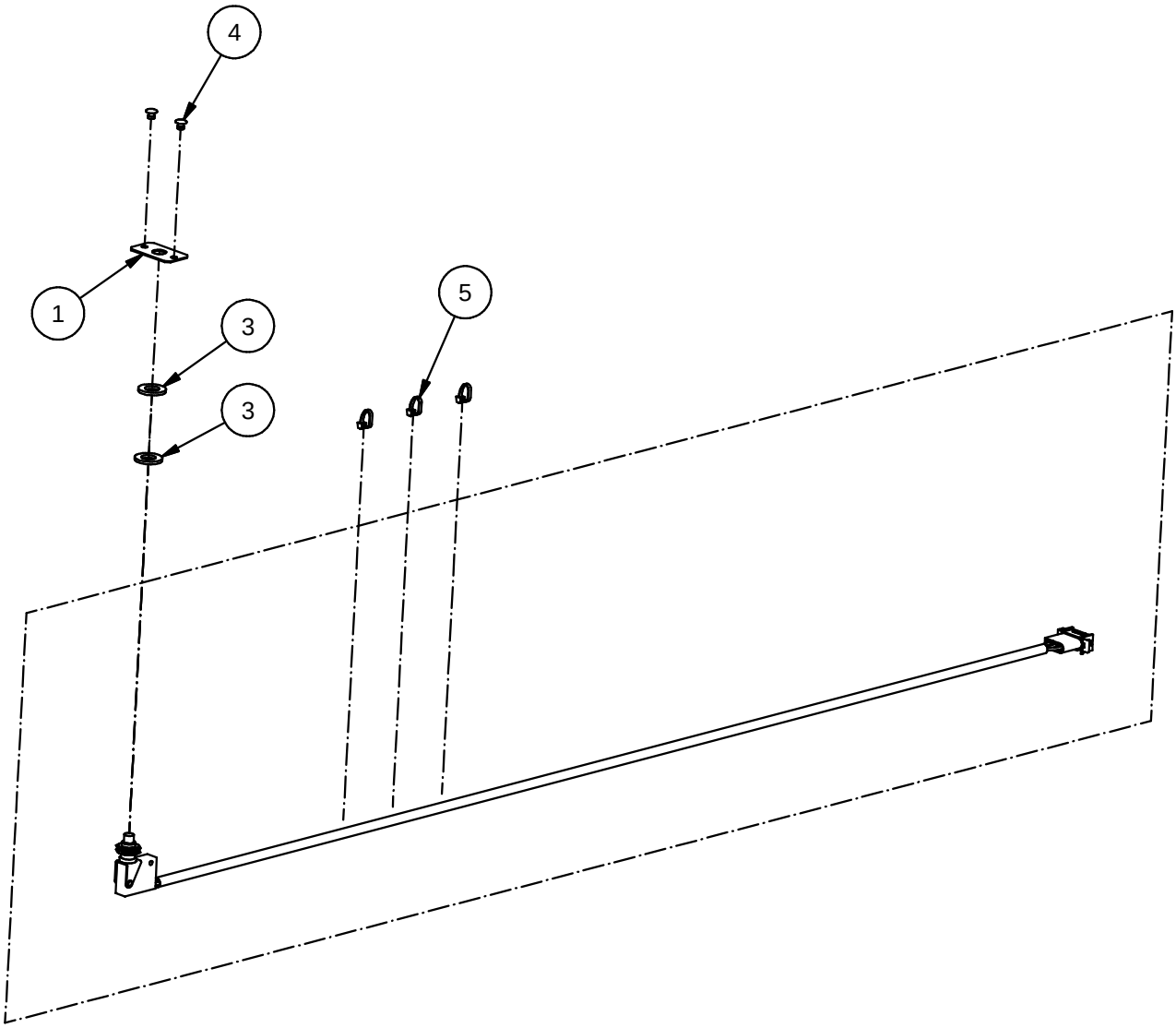

Fig.	Part. No.	Quantity	Description		
1	628684	1	BRACKET MICROSWITCH		
3	561027	2	WASHER	10.5x20x2	
4	653000	2	RIVET AL/ST	4.0x7	AP/D BS
5	500317	3	CABLE TIE	200x4.6	WHITE
7	629346	1	MICROSWITCH IP57		

Be-Ge Industri AB • Box 912 • S-572 29 Oskarshamn • Sweden • Phone +46(0)491761800 • Fax +46(0)49181900

BE - GE	Parts Replacements List **603128** **MICRO SWITCH IP57+BUZZER 12V** **9000**	Doc. R1-603128 Date 120504 Rev. 0
	Valid from 070611 to	Rev.Date

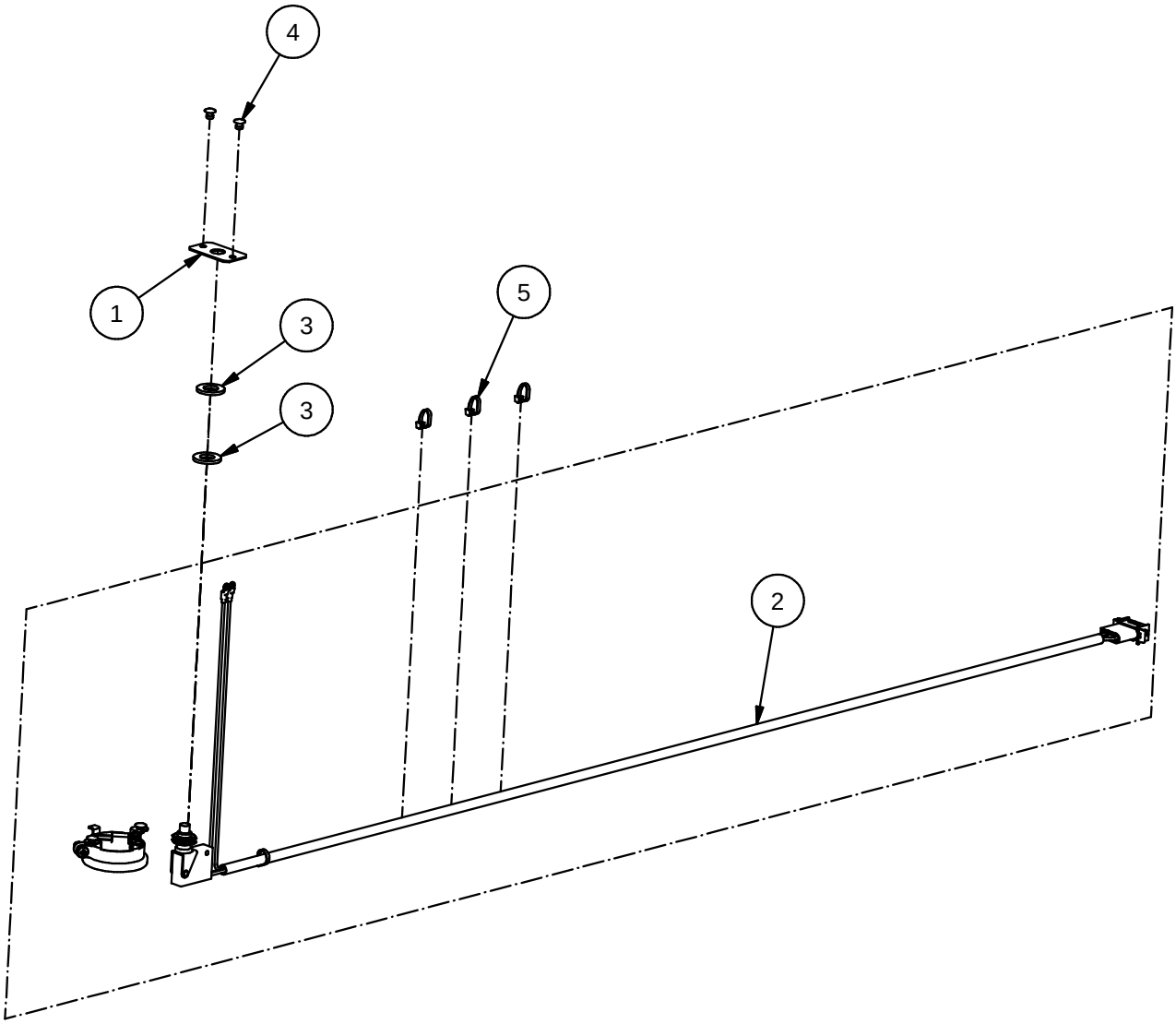

Fig.	Part. No.	Quantity	Description		
1	628684	1	BRACKET MICROSWITCH		
2	629350	1	MICRO SWITCH IP57 + BUZZER 12V		
3	561027	2	WASHER	10.5x20x2	
4	653000	4	RIVET AL/ST	4.0x7	AP/D BS
5	500317	3	CABLE TIE	200x4.6	WHITE

Be-Ge Industri AB • Box 912 • S-572 29 Oskarshamn • Sweden • Phone +46(0)491761800 • Fax +46(0)49181900

BE - GE	Parts Replacements List **603129** **MICRO SWITCH IP57+BUZZER 24V** **9000**	Doc. R1-603129 Date 120504 Rev. 0
	Valid from 070611 to	Rev.Date

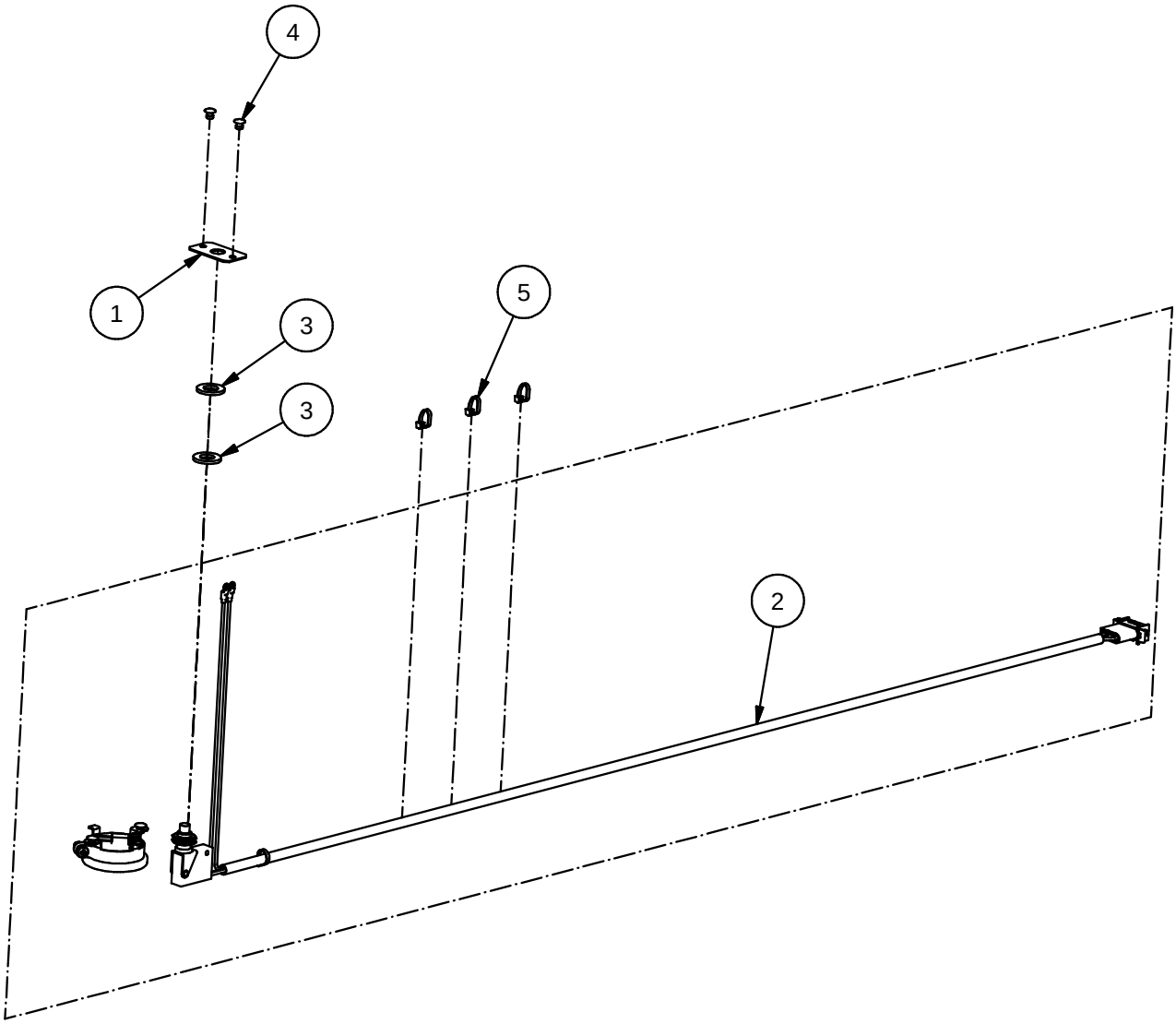

Fig.	Part. No.	Quantity	Description		
1	628684	1	BRACKET MICROSWITCH		
2	629351	1	MICRO SWITCH IP57		
3	561027	2	WASHER	10.5x20x2	
4	653000	4	RIVET AL/ST	4.0x7	AP/D BS
5	500317	3	CABLE TIE	200x4.6	WHITE

Be-Ge Industri AB • Box 912 • S-572 29 Oskarshamn • Sweden • Phone +46(0)491761800 • Fax +46(0)49181900

BE-GE Establ. 1934	Parts Replacements List **603114** **SIDE SUPPORT BACKREST** **9000**	Doc. R1-603114 Date 100518 Rev.
	Valid from 051027 to	Rev.Date

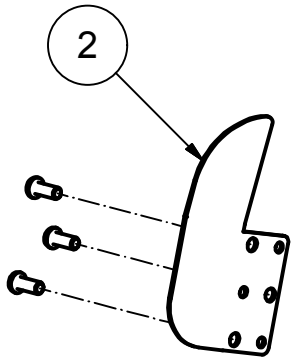

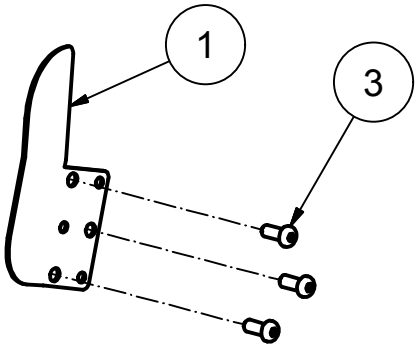

Fig.	Part. No.	Quantity	Description		
1	628868	1	SIDE SUPPORT LEFT		
2	628869	1	SIDE SUPPORT RIGHT		
3	650059	6	SCREW K6S	M8x20	ZN 10.9
4	673294	1	CLEANING NAPKIN 3M VHB		(NOT IN EXPLODED VIEW)
5	673293	0.16 LPM	TAPE 3M 5925	W=19 MM	(NOT IN EXPLODED VIEW)

Be-Ge Industri AB • Box 912 • S-572 29 Oskarshamn • Sweden • Phone +46(0)491761800 • Fax +46(0)49181900

BE - GE	Parts Replacements List **603115** **SIDE SUPPORT BACKREST QR 9000**	Doc. R1-603115 Date 120504 Rev. 0
	Valid from 970813 to	Rev.Date

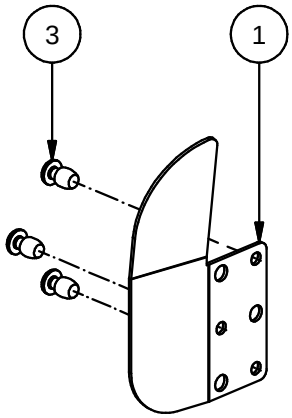

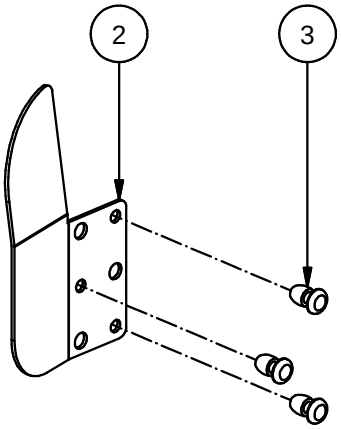

Fig.	Part. No.	Quantity	Description		
1	628869	1	SIDE SUPPORT RIGHT		
2	628868	1	SIDE SUPPORT LEFT		
3	500220	6	RIVET ST/ST	6,4x15	SP/D BS
4	673294	1	CLEANING NAPKIN 3M VHB		(NOT IN EXPLODED VIEW)
5	673293	1	TAPE 3M 5925	W=19 MM	(NOT IN EXPLODED VIEW)

Be-Ge Industri AB • Box 912 • S-572 29 Oskarshamn • Sweden • Phone +46(0)491761800 • Fax +46(0)49181900